daliform GROUP
Building Innovation © Creatori dell'Iglù®

AVIS TECHNIQUE VALIDE CSTB le futur en construction N° 3.1-17-935_V1

IGLU® H 22 cm

Ventilated under-floor cavities for civil and industrial buildings that are being built new or reconstructed. - Urban infrastructure structures: squares, sidewalks, sports facility.
- Creation of an intermediate slab or roofing for cavities used for ventilation and the passage of systems. - Rooms used for humidity and temperature control: drying cells, cold rooms, greenhouses, storage rooms and cellars. - Underground pipes for the passage of utilities. Inspectionable cavities and pits. - By filling it in simply with expanded clay, it can be used to create roof-top gardens. - Underground ducts for the dispersion of water and for drainage. - Overhead sidewalks for passenger loading and unloading or the creation of floating floors. - Levelling height.

Made of ALAPLEN® CP30

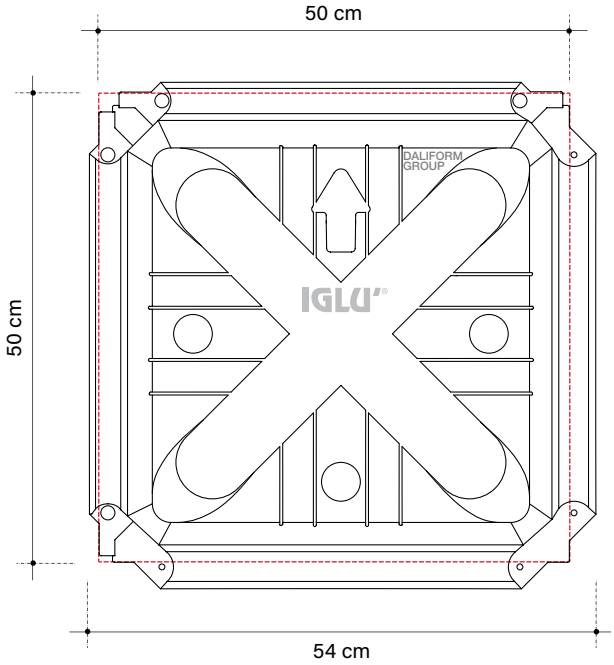

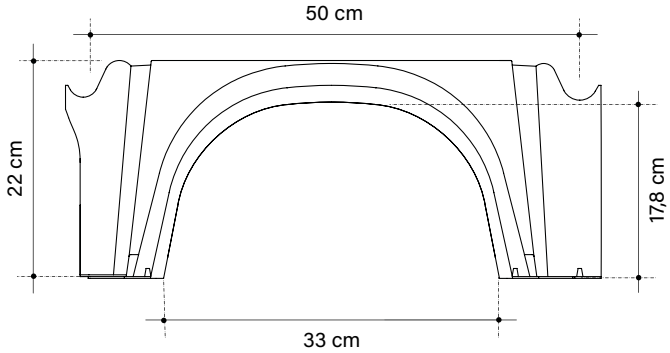

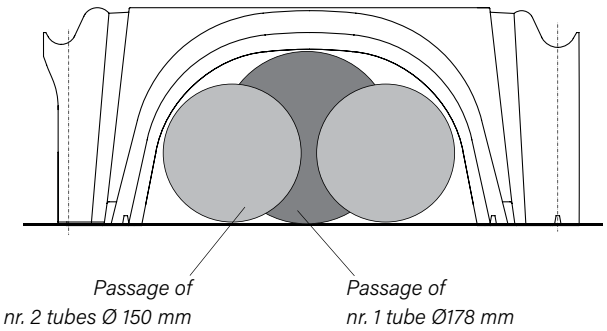

The images are only for examples.
Recyclable material is allowed a size tolerance of ± 1,5%.

0,036 m³/m² Quantity (of concrete to the crown)**
** The volume may vary depending on the pouring condition and the tolerance of the material.

PRESSURES AT THE BOTTOM OF THE STRUCTURE — IGLU'® h 22 cm

Loads [1] kN/m²	Slab cm	Mesh Ø mm maglia cm x cm	Thickness of the lean concrete cm	Pressure at pillar base [2] MPa
15	4	Ø5 / 25 x 25	5 10 15	0,149 0,072 0,043
50	5	Ø6 / 15 x 15	10 15 20	0,210 0,122 0,080
100	8	Ø8 / 20 x 20	15 20 25	0,235 0,153 0,108

[1] *Characteristic values*
[2] *Project values (Ultimate SLU Limit State - Coefficients A1)*

The table expresses, starting from the various examples of overload and of thickness (to be given to the slab), the pressures that would be applied to the feet of the structure, in relation to the (eventual) thicknesses of the lean concrete. The overload hypotheses are indicated in table as an example; the actual load capacity is far superior.
To know the exact values or sizing as shown in the project, contact the technical department.
The Technical Office is available to provide planning support both in the preliminary and in the executive phase to determine the technical characteristics of the structures, the related construction costs and perform comparative analyzes with alternative technical solutions. Upon request, it is also possible to take advantage of technical assistance on site.

TECHNICAL DATA

IGLU'® H 22 cm

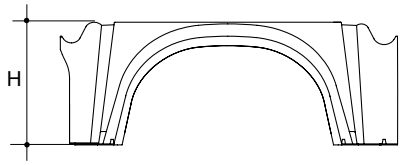

Useful size*	cm	50 x 50
Height H*	cm	22
Quantity of concrete to the crown**	m³/m²	0,036
Average piece weight	kg	1,265
Pallet dimensions	cm	110 x 110 x 256 h
M² pallet	m²/PAL	95
Pieces per pallet***	pcs/PAL	380
Pallet weight***	kg/PAL	494

* Recyclable material is allowed a size tolerance of ± 1,5%.
** The volume may vary depending on the pouring condition and the tolerance of the material.
*** For production necessity the technical data can be change.

DRY ASSEMBLY METHOD

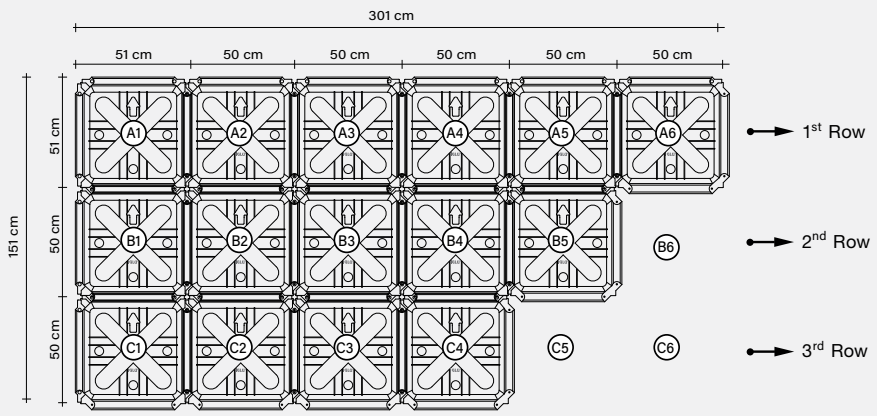

⚠ To ensure a correct installation and perfectly created under-floor cavity please refer to the product's usage requirements.

Dry-stone time-exposure of IGLU'®: 80 m²/h

TECHNICAL PACKING AND TRUCKING

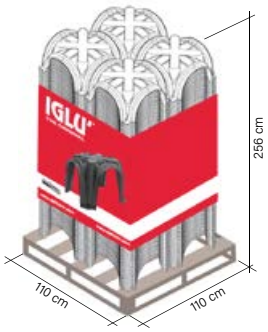

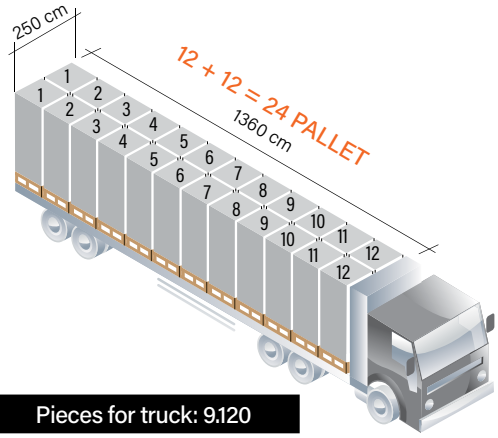

1 pallet: 4 piles of 95 pieces

Pieces for pallet: 380

Pieces for truck: 9.120

LABELLING

Each pallet is identified with:

A coloured band containing:
the brand, a type image of the product, the Company name, the website and any warnings.

A lebel with the following informations: product's name and code, quantity, Certificate of the Environmental Compatibility, date of production, shift of production, n° of the worker, production line batch.

CREDITS

- BBA;
- Declaration of Performance Conformity;
- Hygienic certificate;
- Acoustic check for verification of DIN standards;
- Avis Technique;
- Rupture load tests;
- Productive process monitoring tests;
- Certificate of Environmental Compatibility.

The product does not fear the weather and can be stored outside. Take the utmost care to prevent the product from being deformed or overstressed during the unloading, storage and assembly. In case of disposal the product is totally recyclable.

ACCESSORIES

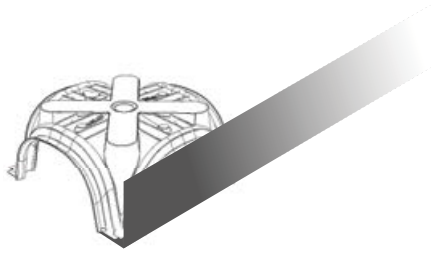

CASTING STOP L-PLAST

Useful size	cm	205 x 23+5+7
Thickness	cm	0,30
Piece weight	kg/pc	0,431
Package	m	50

CASTING STOP PIBIStop

Max Height	cm	22+3+5
Max Width	cm	45
Thickness	cm	0,40
Package	pcs	25

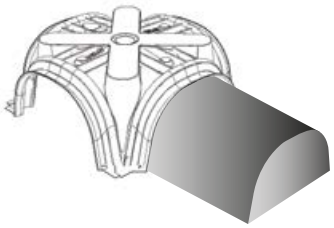

EXTENSION

Width	cm	34,4
Depth	cm	min. 10 max. 50
Height	cm	17,7

EXTENSION

Width	cm	36
Depth	cm	34
Height	cm	20

The information contained in this catalogue could be changed. Please request updated informations from DALIFORM GROUP, which reserves the right to make changes at any moment without notice.
In consideration of recycled material, it is specified that there are tolerance margins caused by environmental factors.

daliform GROUP
Building Innovation © Creatori dell'Iglù®

AVIS TECHNIQUE VALIDE CSTB le futur en construction N° 3.1-17-935_V1

IGLU® H 25 cm

Ventilated under-floor cavities for civil and industrial buildings that are being built new or reconstructed. - Urban infrastructure structures: squares, sidewalks, sports facility.
- Creation of an intermediate slab or roofing for cavities used for ventilation and the passage of systems. - Rooms used for humidity and temperature control: drying cells, cold rooms, greenhouses, storage rooms and cellars. - Underground pipes for the passage of utilities. Inspectionable cavities and pits. - By filling it in simply with expanded clay, it can be used to create roof-top gardens. - Underground ducts for the dispersion of water and for drainage. - Overhead sidewalks for passenger loading and unloading or the creation of floating floors. - Levelling height.

Made of ALAPLEN® CP30

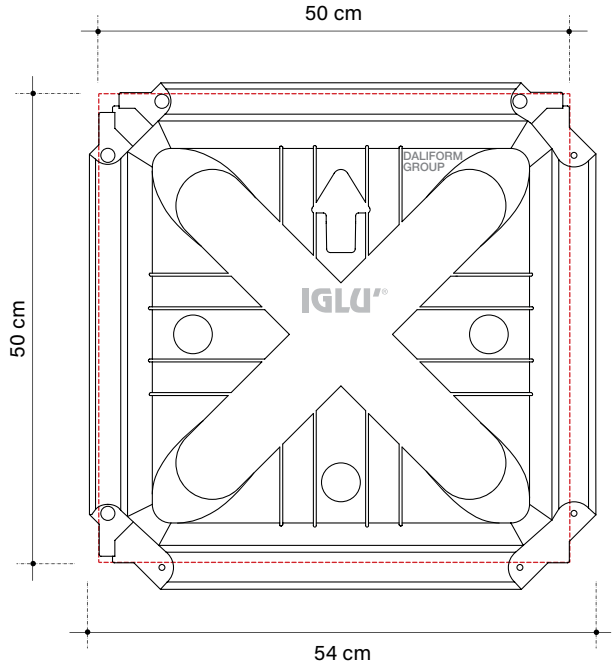

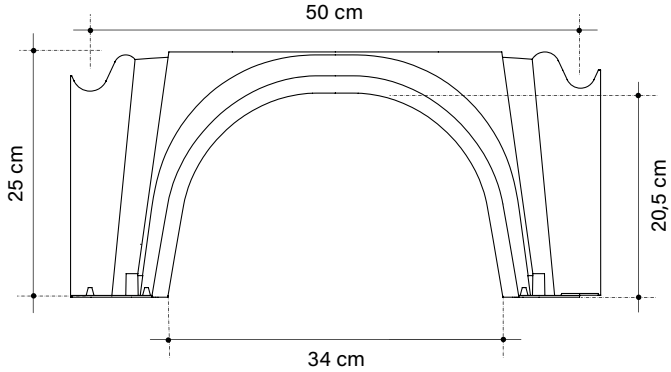

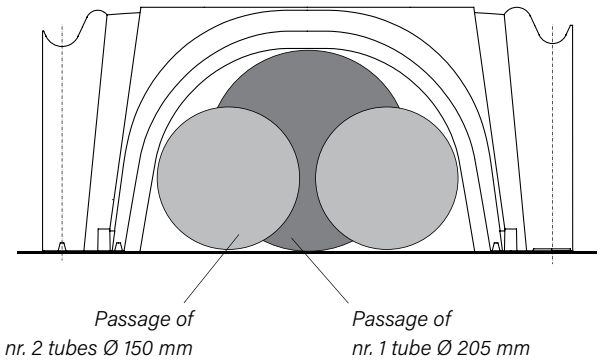

The images are only for examples.
Recyclable material is allowed a size tolerance of ± 1,5%.

0,039 m³/m² Quantity (of concrete to the crown)**
** The volume may vary depending on the pouring condition and the tolerance of the material.

PRESSURES AT THE BOTTOM OF THE STRUCTURE — IGLU'® h 25 cm

Loads [1] kN/m²	Slab cm	Mesh Ø mm maglia cm x cm	Thickness of the lean concrete cm	Pressure at pillar base [2] MPa
15	4	Ø5 / 25 x 25	5 10 15	0,153 0,073 0,043
50	5	Ø6 / 15 x 15	10 15 20	0,213 0,123 0,081
100	8	Ø8 / 20 x 20	15 20 25	0,238 0,154 0,109

[1] *Characteristic values*
[2] *Project values (Ultimate SLU Limit State - Coefficients A1)*

The table expresses, starting from the various examples of overload and of thickness (to be given to the slab), the pressures that would be applied to the feet of the structure, in relation to the (eventual) thicknesses of the lean concrete. The overload hypotheses are indicated in table as an example; the actual load capacity is far superior.
To know the exact values or sizing as shown in the project, contact the technical department.
The Technical Office is available to provide planning support both in the preliminary and in the executive phase to determine the technical characteristics of the structures, the related construction costs and perform comparative analyzes with alternative technical solutions. Upon request, it is also possible to take advantage of technical assistance on site.

TECHNICAL DATA

IGLU'® H 25 cm

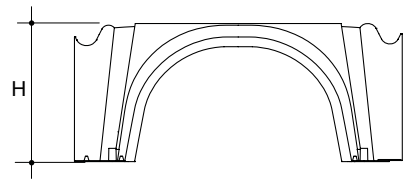

Useful size*	cm	50 x 50
Height H*	cm	25
Quantity of concrete to the crown**	m³/m²	0,039
Average piece weight	kg	1,330
Pallet dimensions	cm	110 x 110 x 254 h
M² pallet	m²/PAL	100
Pieces per pallet***	pcs/PAL	400
Pallet weight***	kg/PAL	545

* Recyclable material is allowed a size tolerance of ± 1,5%.
** The volume may vary depending on the pouring condition and the tolerance of the material.
*** For production necessity the technical data can be change.

DRY ASSEMBLY METHOD

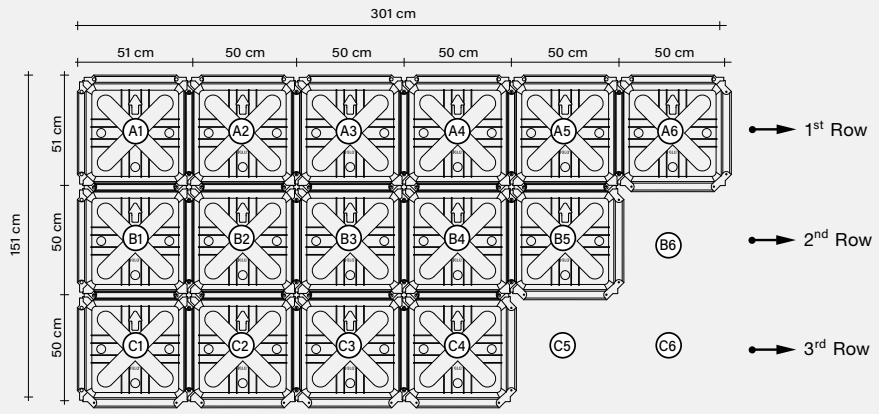

⚠ To ensure a correct installation and perfectly created under-floor cavity please refer to the product's usage requirements.

Dry-stone time-exposure of IGLU'®: 80 m²/h

TECHNICAL PACKING AND TRUCKING

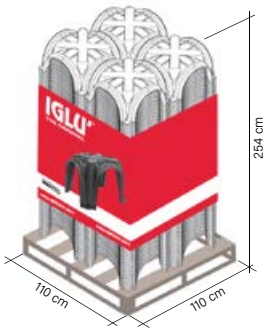

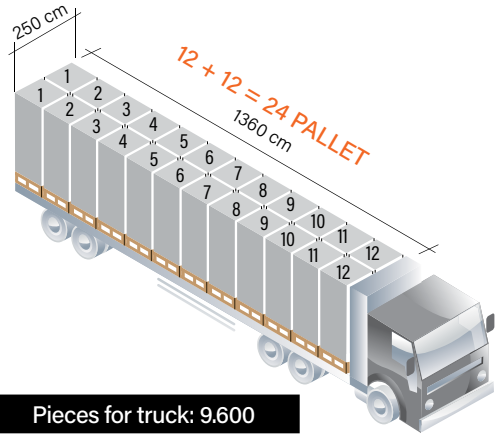

1 pallet: 4 piles of 100 pieces

Pieces for pallet: 400

Pieces for truck: 9.600

LABELLING

Each pallet is identified with:

A coloured band containing:
the brand, a type image of the product, the Company name, the website and any warnings.

A lebel with the following informations: product's name and code, quantity, Certificate of the Environmental Compatibility, date of production, shift of production, n° of the worker, production line batch.

CREDITS

- BBA;
- Declaration of Performance Conformity;
- Hygienic certificate;
- Acoustic check for verification of DIN standards;
- Avis Technique;
- Rupture load tests;
- Productive process monitoring tests;
- Certificate of Environmental Compatibility.

The product does not fear the weather and can be stored outside. Take the utmost care to prevent the product from being deformed or overstressed during the unloading, storage and assembly. In case of disposal the product is totally recyclable.

ACCESSORIES

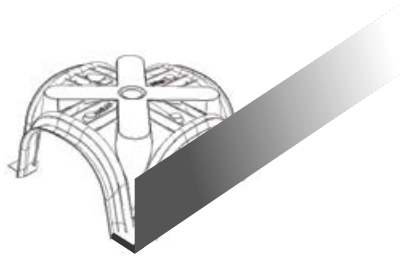

CASTING STOP L-PLAST

Useful size	cm	205 x 23+5+7
Thickness	cm	0,30
Piece weight	kg/pc	0,431
Package	m	50

CASTING STOP PIBIStop

Max Height	cm	22+3+5
Max Width	cm	45
Thickness	cm	0,40
Package	pcs	25

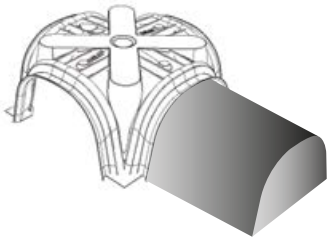

EXTENSION

Width	cm	34,6
Depth	cm	min. 10 max. 50
Height	cm	21,0

EXTENSION

Width	cm	37
Depth	cm	35
Height	cm	23

daliform GROUP
Building Innovation © Creatori dell'Iglù®

Tel. +39 0422 2083 - Fax +39 0422 800234
export@daliform.com - www.daliform.com
Via Postumia Centro, 49 - 31040
Gorgo al Monticano (TV) - Italy

Certified Management System
UNI EN ISO 9001 - UNI EN ISO 14001 - UNI EN ISO 45001 - SA8000

Member of
GBC Italy

The information contained in this catalogue could be changed. Please request updated informations from DALIFORM GROUP, which reserves the right to make changes at any moment without notice.
In consideration of recycled material, it is specified that there are tolerance margins caused by environmental factors.

daliform GROUP
Building Innovation © Creatori dell'Iglù®

AVIS TECHNIQUE VALIDE CSTB le futur en construction N° 3.1-17-935_V1

IGLU' H 27 cm

Ventilated under-floor cavities for civil and industrial buildings that are being built new or reconstructed. - Urban infrastructure structures: squares, sidewalks, sports facility.
- Creation of an intermediate slab or roofing for cavities used for ventilation and the passage of systems. - Rooms used for humidity and temperature control: drying cells, cold rooms, greenhouses, storage rooms and cellars. - Underground pipes for the passage of utilities. Inspectionable cavities and pits. - By filling it in simply with expanded clay, it can be used to create roof-top gardens. - Underground ducts for the dispersion of water and for drainage. - Overhead sidewalks for passenger loading and unloading or the creation of floating floors. - Levelling height.

Made of ALAPLEN® CP30

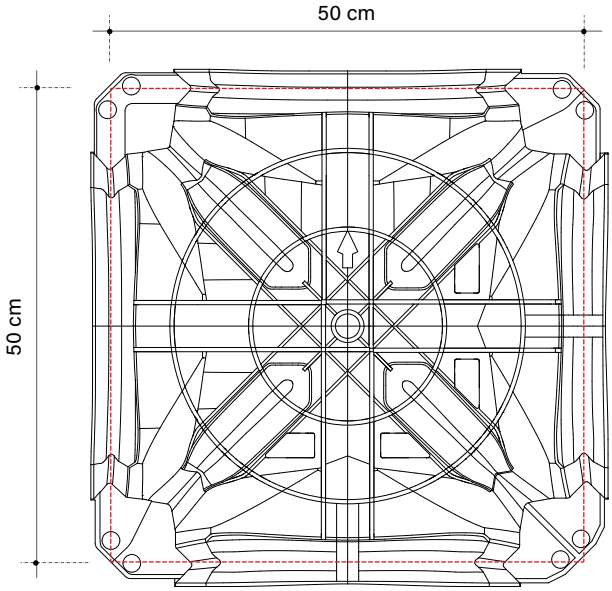

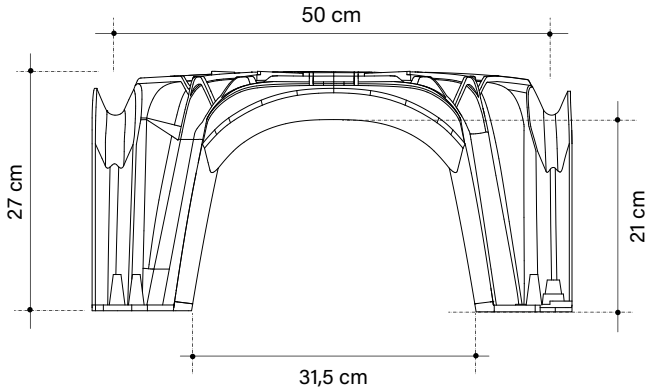

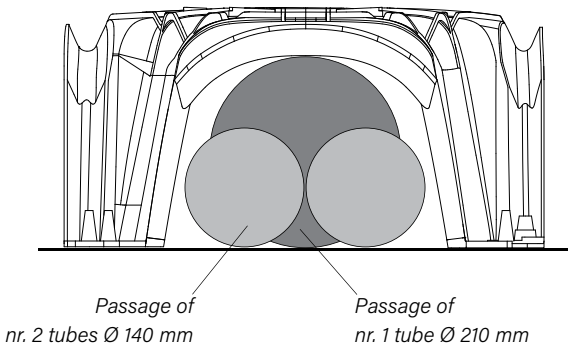

The images are only for examples.
Recyclable material is allowed a size tolerance of ± 1,5%.

0,031 m³/m² Quantity (of concrete to the crown)**
** The volume may vary depending on the pouring condition and the tolerance of the material.

PRESSURES AT THE BOTTOM OF THE STRUCTURE

Loads [1] kN/m²	Slab cm	Mesh Ø mm maglia cm x cm	Thickness of the lean concrete cm	Pressure at pillar base [2] MPa
15	4	Ø6 / 25 x 25	5 7 10	0.122 0.094 0.067
50	6	Ø8 / 20 x 20	10 15 20	0.194 0.121 0.084
100	8	Ø10 / 20 x 20	15 20 25	0.223 0.160 0.116

[1] *Characteristic values*
[2] *Project values (Ultimate SLU Limit State - Coefficients A1)*

The table expresses, starting from the various examples of overload and of thickness (to be given to the slab), the pressures that would be applied to the feet of the structure, in relation to the (eventual) thicknesses of the lean concrete. The overload hypotheses are indicated in table as an example; the actual load capacity is far superior.
To know the exact values or sizing as shown in the project, contact the technical department.
The Technical Office is available to provide planning support both in the preliminary and in the executive phase to determine the technical characteristics of the structures, the related construction costs and perform comparative analyzes with alternative technical solutions. Upon request, it is also possible to take advantage of technical assistance on site.

TECHNICAL DATA

IGLU'® H 27 cm

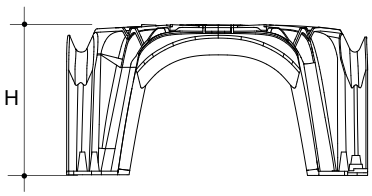

Useful size*	cm	50 x 50
Height H*	cm	27
Quantity of concrete to the crown**	m³/m²	0,031
Average piece weight	kg	1,952
Pallet dimensions	cm	110 x 110 x 259 h
M² pallet	m²/PAL	120
Pieces per pallet***	pcs/PAL	480
Pallet weight***	kg/PAL	950

* Recyclable material is allowed a size tolerance of ± 1,5%.
** The volume may vary depending on the pouring condition and the tolerance of the material.
*** For production necessity the technical data can be change.

DRY ASSEMBLY METHOD

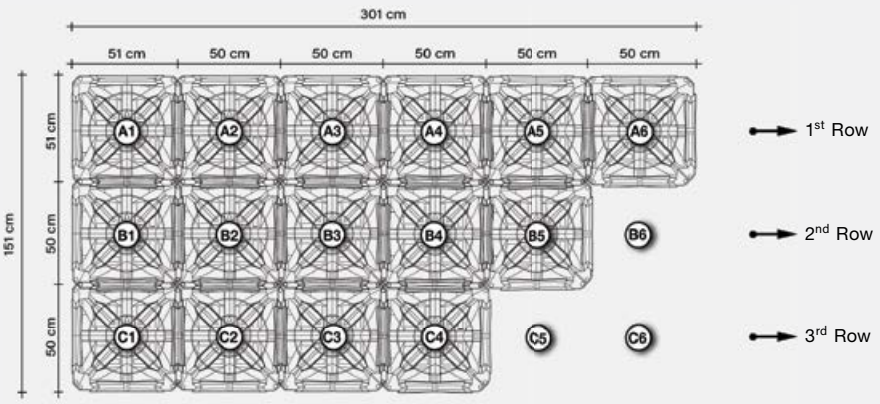

⚠ To ensure a correct installation and perfectly created under-floor cavity please refer to the product's usage requirements.

Dry-stone time-exposure of IGLU'®: 80 m²/h

TECHNICAL PACKING AND TRUCKING

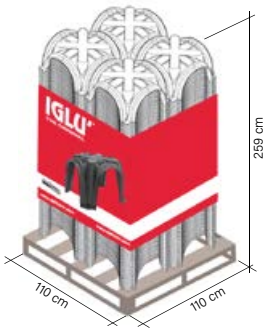

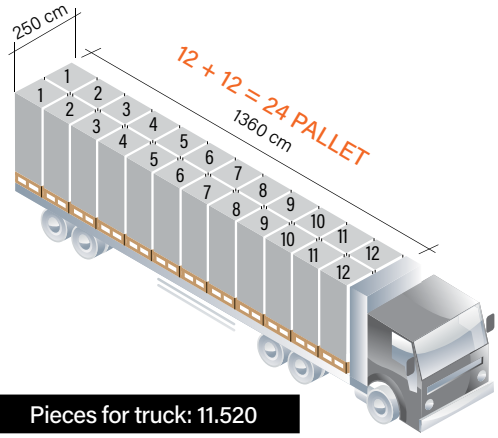

1 pallet: 4 piles of 120 pieces

Pieces for pallet: 480

Pieces for truck: 11.520

LABELLING

Each pallet is identified with:

A coloured band containing:
the brand, a type image of the product, the Company name, the website and any warnings.

A lebel with the following informations: product's name and code, quantity, Certificate of the Environmental Compatibility, date of production, shift of production, n° of the worker, production line batch.

CREDITS

- BBA;
- Declaration of Performance Conformity;
- Hygienic certificate;
- Acoustic check for verification of DIN standards;
- Avis Technique;
- Rupture load tests;
- Productive process monitoring tests;
- Certificate of Environmental Compatibility.

The product does not fear the weather and can be stored outside. Take the utmost care to prevent the product from being deformed or overstressed during the unloading, storage and assembly. In case of disposal the product is totally recyclable.

ACCESSORIES

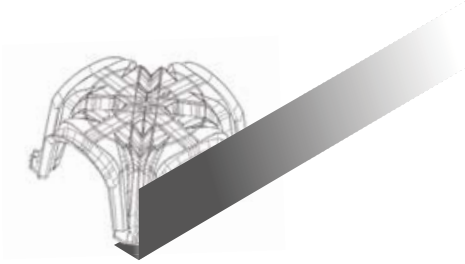

CASTING STOP L-PLAST

Useful size	cm	205 x 25+7
Thickness	cm	0,30
Piece weight	kg/pc	0,525
Package	m	50

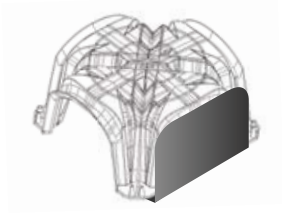

CASTING STOP PIBIStop

Max Height	cm	27+5
Max Width	cm	45
Thickness	cm	0,40
Package	pcs	25

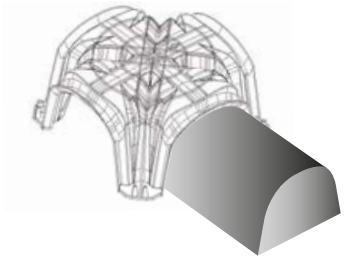

EXTENSION

Width	cm	35,2
Depth	cm	min. 10 max. 50
Height	cm	22,5

EXTENSION

Width	cm	40
Depth	cm	37
Height	cm	24

The information contained in this catalogue could be changed. Please request updated informations from DALIFORM GROUP, which reserves the right to make changes at any moment without notice.
In consideration of recycled material, it is specified that there are tolerance margins caused by environmental factors.

daliform GROUP
Building Innovation © Creatori dell'Iglù®

AVIS TECHNIQUE VALIDE CSTB le futur en construction N° 3.1-17-935_V1

IGLU® H 30 cm

Ventilated under-floor cavities for civil and industrial buildings that are being built new or reconstructed. - Urban infrastructure structures: squares, sidewalks, sports facility.
- Creation of an intermediate slab or roofing for cavities used for ventilation and the passage of systems. - Rooms used for humidity and temperature control: drying cells, cold rooms, greenhouses, storage rooms and cellars. - Underground pipes for the passage of utilities. Inspectionable cavities and pits. - By filling it in simply with expanded clay, it can be used to create roof-top gardens. - Underground ducts for the dispersion of water and for drainage. - Overhead sidewalks for passenger loading and unloading or the creation of floating floors. - Levelling height.

Made of ALAPLEN® CP30

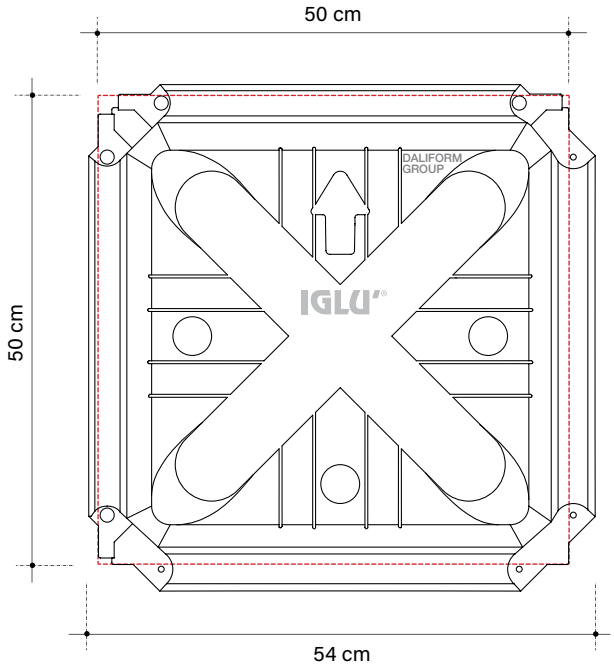

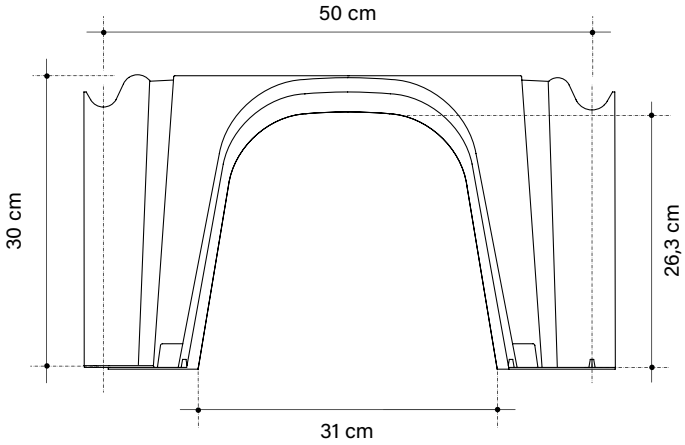

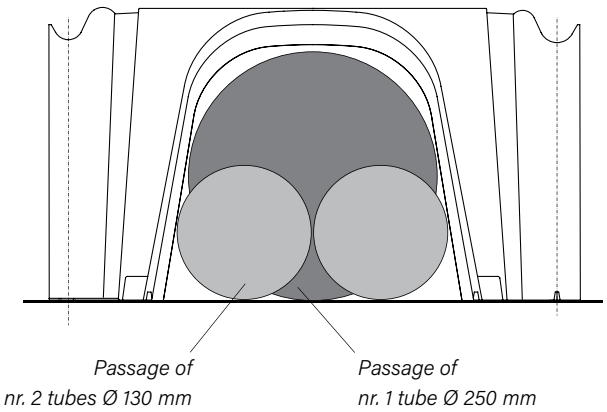

The images are only for examples.
Recyclable material is allowed a size tolerance of ± 1,5%.

0,046 m³/m² Quantity (of concrete to the crown)**
** The volume may vary depending on the pouring condition and the tolerance of the material.

PRESSURES AT THE BOTTOM OF THE STRUCTURE — IGLU'® h 30 cm

Loads [1] kN/m²	Slab cm	Mesh Ø mm maglia cm x cm	Thickness of the lean concrete cm	Pressure at pillar base [2] MPa
15	4	Ø5 / 25 x 25	5 10 15	0,129 0,065 0,040
50	5	Ø6 / 15 x 15	10 15 20	0,189 0,113 0,075
100	8	Ø8 / 20 x 20	15 20 25	0,217 0,144 0,102

[1] *Characteristic values*
[2] *Project values (Ultimate SLU Limit State - Coefficients A1)*

The table expresses, starting from the various examples of overload and of thickness (to be given to the slab), the pressures that would be applied to the feet of the structure, in relation to the (eventual) thicknesses of the lean concrete. The overload hypotheses are indicated in table as an example; the actual load capacity is far superior.
To know the exact values or sizing as shown in the project, contact the technical department.
The Technical Office is available to provide planning support both in the preliminary and in the executive phase to determine the technical characteristics of the structures, the related construction costs and perform comparative analyzes with alternative technical solutions. Upon request, it is also possible to take advantage of technical assistance on site.

TECHNICAL DATA

IGLU'® H 30 cm

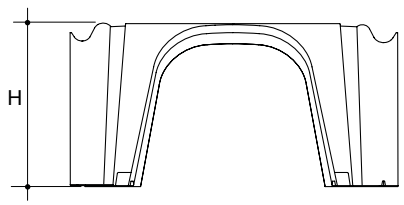

Useful size*	cm	50 x 50
Height H*	cm	30
Quantity of concrete to the crown**	m³/m²	0,046
Average piece weight	kg	1,406
Pallet dimensions	cm	110 x 110 x 243 h
M² pallet	m²/PAL	80
Pieces per pallet***	pcs/PAL	320
Pallet weight***	kg/PAL	463

* Recyclable material is allowed a size tolerance of ± 1,5%.
** The volume may vary depending on the pouring condition and the tolerance of the material.
*** For production necessity the technical data can be change.

DRY ASSEMBLY METHOD

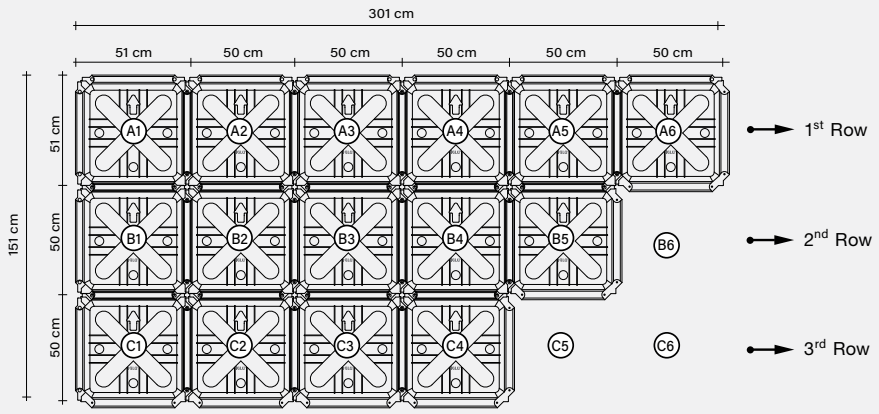

⚠ To ensure a correct installation and perfectly created under-floor cavity please refer to the product's usage requirements.

Dry-stone time-exposure of IGLU'®: 80 m²/h

TECHNICAL PACKING AND TRUCKING

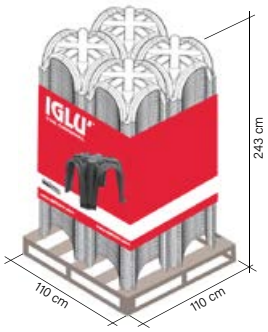

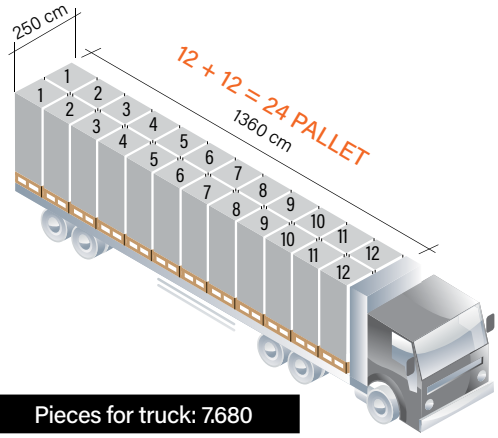

1 pallet: 4 piles of 80 pieces

Pieces for pallet: 320

Pieces for truck: 7.680

LABELLING

Each pallet is identified with:

A coloured band containing:
the brand, a type image of the product, the Company name, the website and any warnings.

A lebel with the following informations: product's name and code, quantity, Certificate of the Environmental Compatibility, date of production, shift of production, n° of the worker, production line batch.

CREDITS

- BBA;
- Declaration of Performance Conformity;
- Hygienic certificate;
- Acoustic check for verification of DIN standards;
- Avis Technique;
- Rupture load tests;
- Productive process monitoring tests;
- Certificate of Environmental Compatibility.

The product does not fear the weather and can be stored outside. Take the utmost care to prevent the product from being deformed or overstressed during the unloading, storage and assembly. In case of disposal the product is totally recyclable.

ACCESSORIES

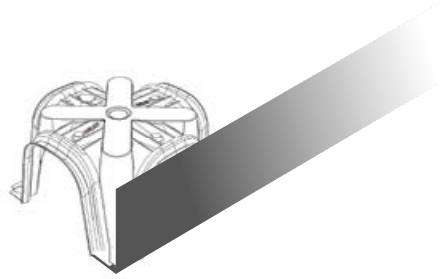

CASTING STOP L-PLAST

Useful size	cm	205 x 23+5+7
Thickness	cm	0,30
Piece weight	kg/pc	0,431
Package	m	50

CASTING STOP PIBIStop

Max Height	cm	30+5+5+5+5
Max Width	cm	45
Thickness	cm	0,40
Package	pcs	25

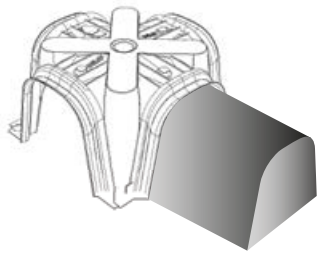

EXTENSION

Width	cm	32,2
Depth	cm	min. 10 max. 50
Height	cm	26,6

EXTENSION

Width	cm	34
Depth	cm	32
Height	cm	28

daliform GROUP
Building Innovation © Creatori dell'Iglù®

Tel. +39 0422 2083 - Fax +39 0422 800234
export@daliform.com - www.daliform.com
Via Postumia Centro, 49 - 31040
Gorgo al Monticano (TV) - Italy

Certified Management System
UNI EN ISO 9001 - UNI EN ISO 14001 - UNI EN ISO 45001 - SA8000

Member of
GBC Italy

PRODOTTO CONFORME
COMPATIBILITÀ AMBIENTALE

The information contained in this catalogue could be changed. Please request updated informations from DALIFORM GROUP, which reserves the right to make changes at any moment without notice.
In consideration of recycled material, it is specified that there are tolerance margins caused by environmental factors.

daliform GROUP
Building Innovation © Creatori dell'Iglù®

AVIS TECHNIQUE VALIDE CSTB le futur en construction N° 3.1-17-935_V1

IGLU® H 35 cm

Ventilated under-floor cavities for civil and industrial buildings that are being built new or reconstructed. - Urban infrastructure structures: squares, sidewalks, sports facility.
- Creation of an intermediate slab or roofing for cavities used for ventilation and the passage of systems. - Rooms used for humidity and temperature control: drying cells, cold rooms, greenhouses, storage rooms and cellars. - Underground pipes for the passage of utilities. Inspectionable cavities and pits. - By filling it in simply with expanded clay, it can be used to create roof-top gardens. - Underground ducts for the dispersion of water and for drainage. - Overhead sidewalks for passenger loading and unloading or the creation of floating floors. - Levelling height.

Made of ALAPLEN® CP30

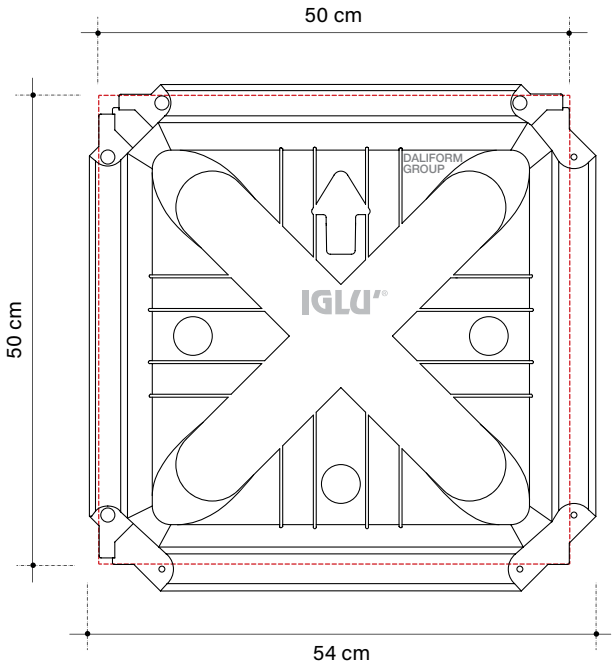

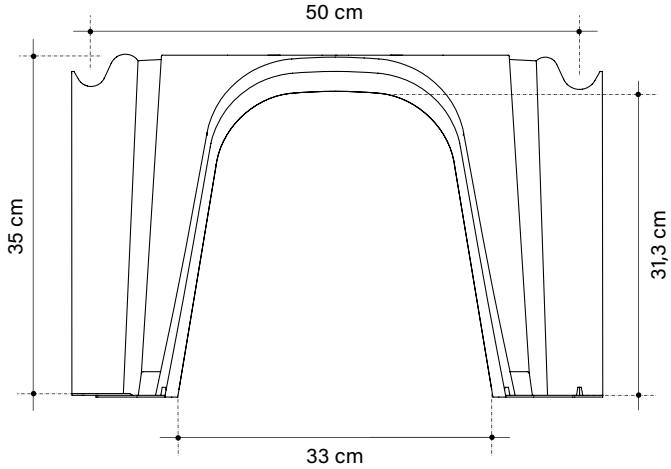

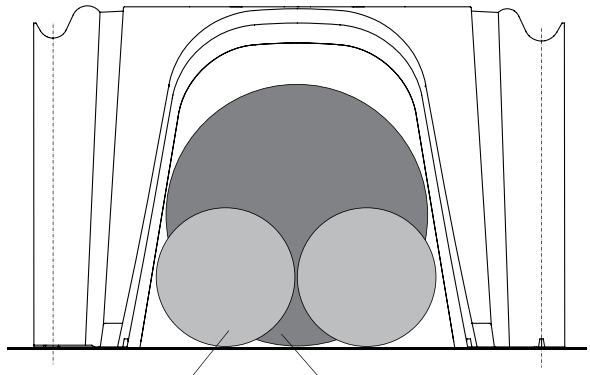

Passage of nr. 2 tubes Ø 145 mm

Passage of nr. 1 tube Ø 265 mm

The images are only for examples.
Recyclable material is allowed a size tolerance of ± 1,5%.

0,052 m³/m² Quantity (of concrete to the crown)**
** The volume may vary depending on the pouring condition and the tolerance of the material.

PRESSURES AT THE BOTTOM OF THE STRUCTURE — IGLU'® h 35 cm

Loads [1] kN/m²	Slab cm	Mesh Ø mm maglia cm x cm	Thickness of the lean concrete cm	Pressure at pillar base [2] MPa
15	4	Ø5 / 25 x 25	5 10 15	0,139 0,069 0,042
50	5	Ø6 / 15 x 15	10 15 20	0,198 0,117 0,077
100	8	Ø8 / 20 x 20	15 20 25	0,225 0,148 0,105

[1] *Characteristic values*
[2] *Project values (Ultimate SLU Limit State - Coefficients A1)*

The table expresses, starting from the various examples of overload and of thickness (to be given to the slab), the pressures that would be applied to the feet of the structure, in relation to the (eventual) thicknesses of the lean concrete. The overload hypotheses are indicated in table as an example; the actual load capacity is far superior.
To know the exact values or sizing as shown in the project, contact the technical department.
The Technical Office is available to provide planning support both in the preliminary and in the executive phase to determine the technical characteristics of the structures, the related construction costs and perform comparative analyzes with alternative technical solutions. Upon request, it is also possible to take advantage of technical assistance on site.

TECHNICAL DATA

IGLU'® H 35 cm

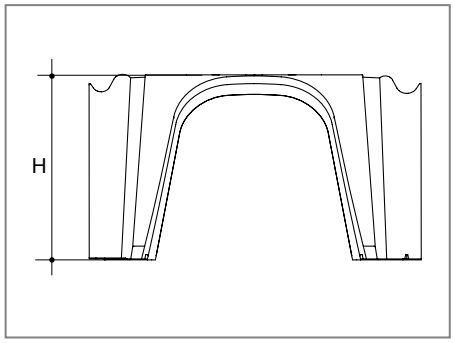

Useful size*	cm	50 x 50
Height H*	cm	35
Quantity of concrete to the crown**	m³/m²	0,052
Average piece weight	kg	1,492
Pallet dimensions	cm	110 x 110 x 248 h
M² pallet	m²/PAL	80
Pieces per pallet***	pcs/PAL	320
Pallet weight***	kg/PAL	491

* Recyclable material is allowed a size tolerance of ± 1,5%.
** The volume may vary depending on the pouring condition and the tolerance of the material.
*** For production necessity the technical data can be change.

DRY ASSEMBLY METHOD

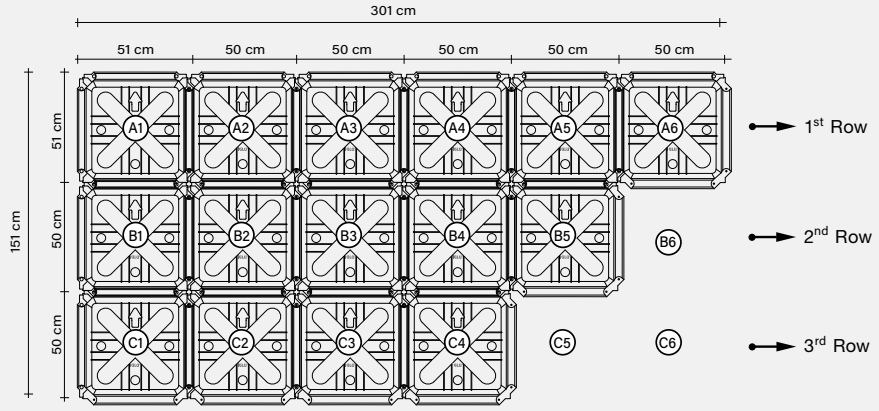

⚠ To ensure a correct installation and perfectly created under-floor cavity please refer to the product's usage requirements.

Dry-stone time-exposure of IGLU'®: 80 m²/h

TECHNICAL PACKING AND TRUCKING

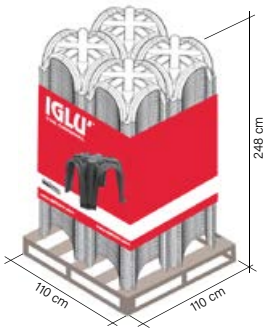

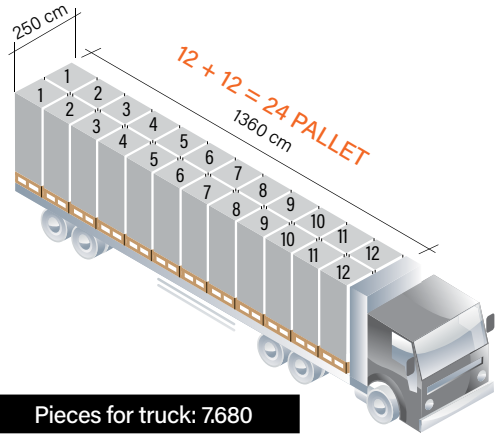

1 pallet: 4 piles of 80 pieces

Pieces for pallet: 320

Pieces for truck: 7.680

LABELLING

Each pallet is identified with:

A coloured band containing:
the brand, a type image of the product, the Company name, the website and any warnings.

A lebel with the following informations: product's name and code, quantity, Certificate of the Environmental Compatibility, date of production, shift of production, n° of the worker, production line batch.

CREDITS

- BBA;
- Declaration of Performance Conformity;
- Hygienic certificate;
- Acoustic check for verification of DIN standards;
- Avis Technique;
- Rupture load tests;
- Productive process monitoring tests;
- Certificate of Environmental Compatibility.

The product does not fear the weather and can be stored outside. Take the utmost care to prevent the product from being deformed or overstressed during the unloading, storage and assembly. In case of disposal the product is totally recyclable.

ACCESSORIES

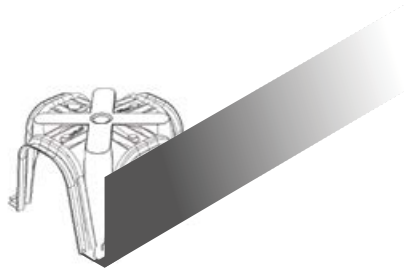

CASTING STOP L-PLAST

Useful size	cm	205 x 33,5+5+5+6,5
Thickness	cm	0,40
Piece weight	kg/pc	0,820
Package	m	50

CASTING STOP PIBIStop

Max Height	cm	30+5+5+5+5
Max Width	cm	45
Thickness	cm	0,40
Package	pcs	25

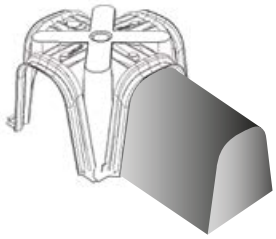

EXTENSION

Width	cm	33,0
Depth	cm	min. 10 max. 50
Height	cm	32,0

EXTENSION

Width	cm	36
Depth	cm	33
Height	cm	33

daliform GROUP
Building Innovation © Creatori dell'Iglù®

Tel. +39 0422 2083 - Fax +39 0422 800234
export@daliform.com - www.daliform.com
Via Postumia Centro, 49 - 31040
Gorgo al Monticano (TV) - Italy

Certified Management System
UNI EN ISO 9001 - UNI EN ISO 14001 - UNI EN ISO 45001 - SA8000

Member of
GBC Italy

PRODOTTO CONFORME
COMPATIBILITÀ AMBIENTALE

The information contained in this catalogue could be changed. Please request updated informations from DALIFORM GROUP, which reserves the right to make changes at any moment without notice.
In consideration of recycled material, it is specified that there are tolerance margins caused by environmental factors.

daliform GROUP
Building Innovation © Creatori dell'Iglù®

AVIS TECHNIQUE VALIDE CSTB le futur en construction N° 3.1-17-935_V1

IGLU® H 40 cm

Ventilated under-floor cavities for civil and industrial buildings that are being built new or reconstructed. - Urban infrastructure structures: squares, sidewalks, sports facility.
- Creation of an intermediate slab or roofing for cavities used for ventilation and the passage of systems. - Rooms used for humidity and temperature control: drying cells, cold rooms, greenhouses, storage rooms and cellars. - Underground pipes for the passage of utilities. Inspectionable cavities and pits. - By filling it in simply with expanded clay, it can be used to create roof-top gardens. - Underground ducts for the dispersion of water and for drainage. - Overhead sidewalks for passenger loading and unloading or the creation of floating floors. - Levelling height.

Made of ALAPLEN® CP30

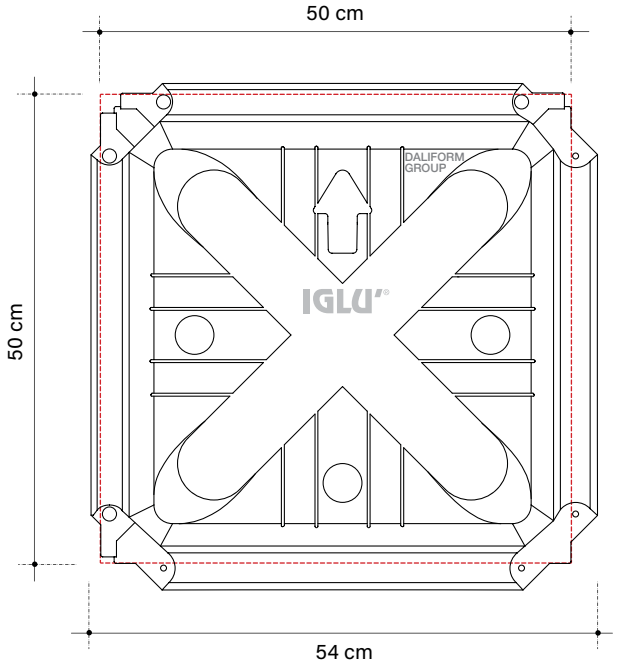

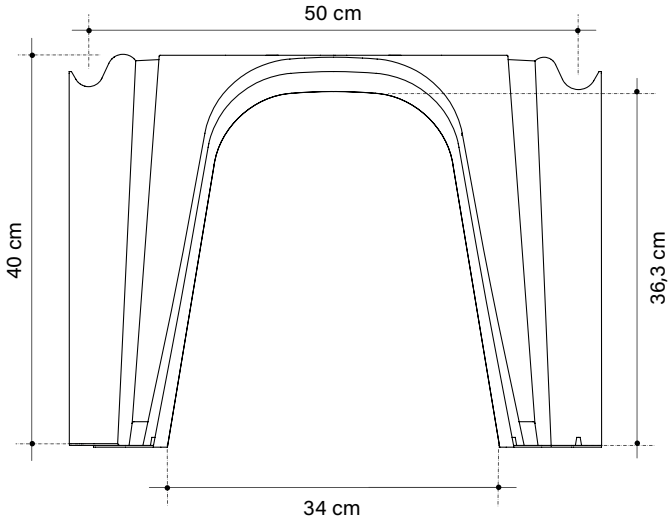

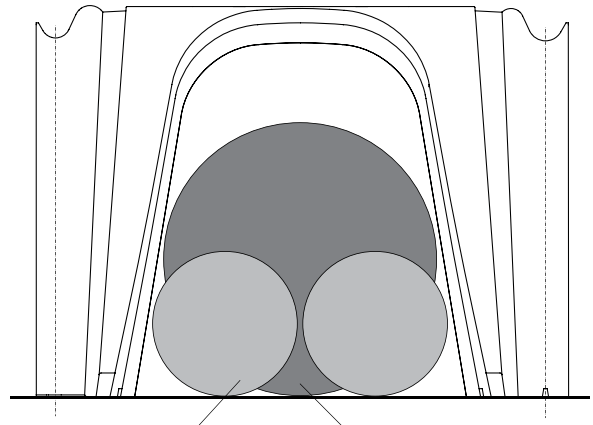

Passage of nr. 2 tubes Ø 150 mm

Passage of nr. 1 tube Ø 285 mm

The images are only for examples.
Recyclable material is allowed a size tolerance of ± 1,5%.

0,058 m³/m² Quantity (of concrete to the crown)**
** The volume may vary depending on the pouring condition and the tolerance of the material.

PRESSURES AT THE BOTTOM OF THE STRUCTURE — IGLU'® h 40 cm

Loads [1] kN/m²	Slab cm	Mesh Ø mm maglia cm x cm	Thickness of the lean concrete cm	Pressure at pillar base [2] MPa
15	4	Ø5 / 25 x 25	5 10 15	0,152 0,073 0,044
50	5	Ø6 / 15 x 15	10 15 20	0,210 0,122 0,080
100	8	Ø8 / 20 x 20	15 20 25	0,235 0,153 0,108

[1] *Characteristic values*
[2] *Project values (Ultimate SLU Limit State - Coefficients A1)*

The table expresses, starting from the various examples of overload and of thickness (to be given to the slab), the pressures that would be applied to the feet of the structure, in relation to the (eventual) thicknesses of the lean concrete. The overload hypotheses are indicated in table as an example; the actual load capacity is far superior.
To know the exact values or sizing as shown in the project, contact the technical department.
The Technical Office is available to provide planning support both in the preliminary and in the executive phase to determine the technical characteristics of the structures, the related construction costs and perform comparative analyzes with alternative technical solutions. Upon request, it is also possible to take advantage of technical assistance on site.

TECHNICAL DATA

IGLU'® H 40 cm

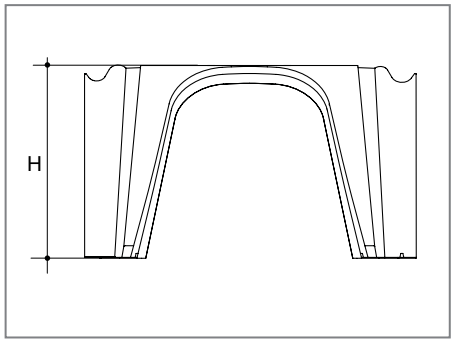

Useful size*	cm	50 x 50
Height H*	cm	40
Quantity of concrete to the crown**	m³/m²	0,058
Average piece weight	kg	1,557
Pallet dimensions	cm	110 x 110 x 253 h
M² pallet	m²/PAL	80
Pieces per pallet***	pcs/PAL	320
Pallet weight***	kg/PAL	511

* Recyclable material is allowed a size tolerance of ± 1,5%.
** The volume may vary depending on the pouring condition and the tolerance of the material.
*** For production necessity the technical data can be change.

DRY ASSEMBLY METHOD

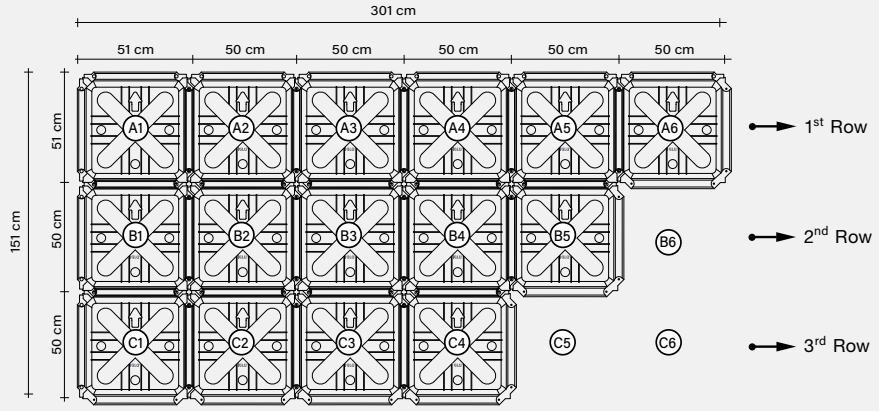

⚠ To ensure a correct installation and perfectly created under-floor cavity please refer to the product's usage requirements.

Dry-stone time-exposure of IGLU'®: 80 m²/h

TECHNICAL PACKING AND TRUCKING

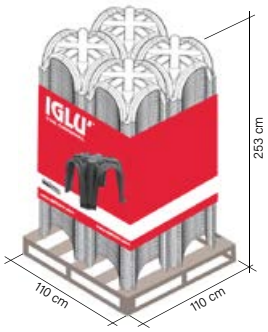

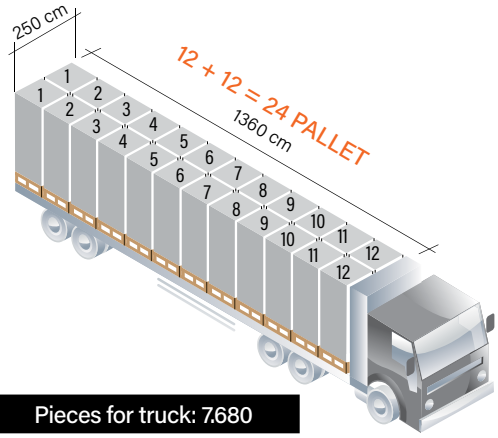

1 pallet: 4 piles of 80 pieces

Pieces for pallet: 320

Pieces for truck: 7.680

LABELLING

Each pallet is identified with:

A coloured band containing:
the brand, a type image of the product, the Company name, the website and any warnings.

A lebel with the following informations: product's name and code, quantity, Certificate of the Environmental Compatibility, date of production, shift of production, n° of the worker, production line batch.

CREDITS

- BBA;
- Declaration of Performance Conformity;
- Hygienic certificate;
- Acoustic check for verification of DIN standards;
- Avis Technique;
- Rupture load tests;
- Productive process monitoring tests;
- Certificate of Environmental Compatibility.

The product does not fear the weather and can be stored outside. Take the utmost care to prevent the product from being deformed or overstressed during the unloading, storage and assembly. In case of disposal the product is totally recyclable.

ACCESSORIES

CASTING STOP L-PLAST

Useful size	cm	205 x 33,5+5+5+6,5
Thickness	cm	0,40
Piece weight	kg/pc	0,820
Package	m	50

CASTING STOP PIBIStop

Max Height	cm	30+5+5+5+5
Max Width	cm	45
Thickness	cm	0,40
Package	pcs	25

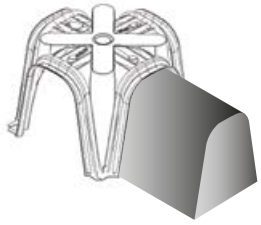

EXTENSION

Width	cm	34,8
Depth	cm	min. 10 max. 50
Height	cm	37,1

EXTENSION

Width	cm	38
Depth	cm	34
Height	cm	38

daliform GROUP
Building Innovation © Creatori dell'Iglù®

Tel. +39 0422 2083 - Fax +39 0422 800234
export@daliform.com - www.daliform.com
Via Postumia Centro, 49 - 31040
Gorgo al Monticano (TV) - Italy

Certified Management System
UNI EN ISO 9001 - UNI EN ISO 14001 - UNI EN ISO 45001 - SA8000

Member of GBC Italy

The information contained in this catalogue could be changed. Please request updated informations from DALIFORM GROUP, which reserves the right to make changes at any moment without notice.
In consideration of recycled material, it is specified that there are tolerance margins caused by environmental factors.

daliform GROUP
Building Innovation © Creatori dell'Iglù®

AVIS TECHNIQUE VALIDE CSTB le futur en construction N° 3.1-17-935_V1

IGLU® H 45 cm

Ventilated under-floor cavities for civil and industrial buildings that are being built new or reconstructed. - Urban infrastructure structures: squares, sidewalks, sports facility.
- Creation of an intermediate slab or roofing for cavities used for ventilation and the passage of systems. - Rooms used for humidity and temperature control: drying cells, cold rooms, greenhouses, storage rooms and cellars. - Underground pipes for the passage of utilities. Inspectionable cavities and pits. - By filling it in simply with expanded clay, it can be used to create roof-top gardens. - Underground ducts for the dispersion of water and for drainage. - Overhead sidewalks for passenger loading and unloading or the creation of floating floors. - Levelling height.

Made of ALAPLEN® CP30

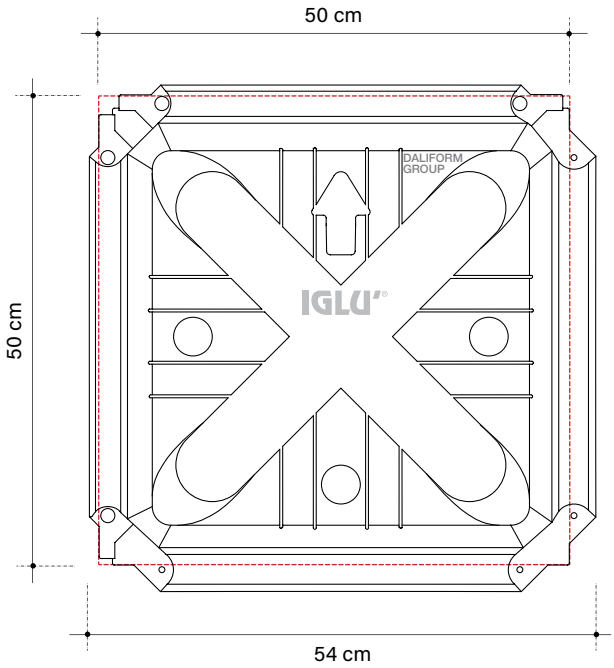

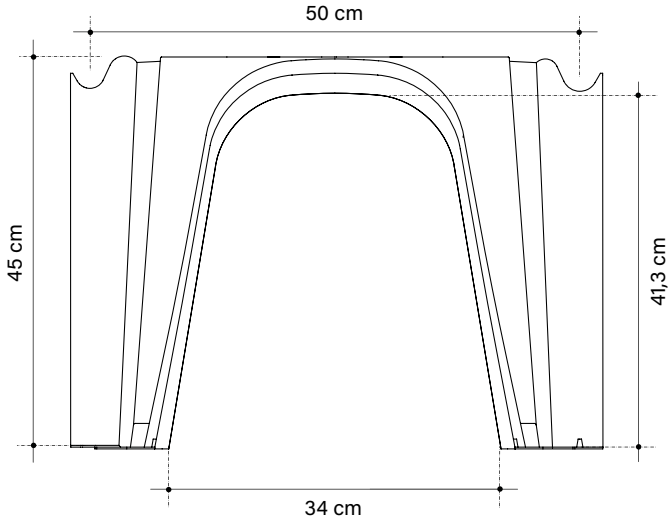

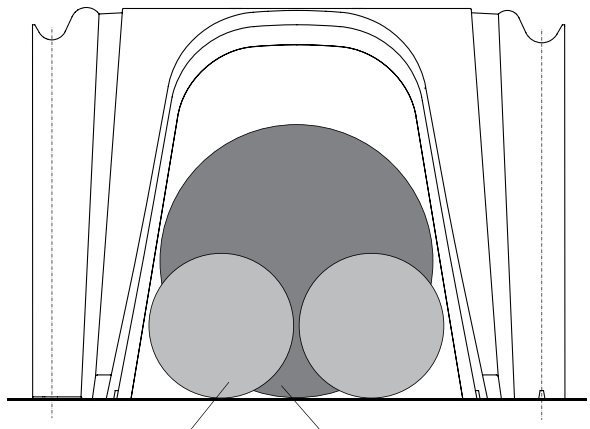

Passage of nr. 2 tubes Ø 160 mm

Passage of nr. 1 tube Ø 295 mm

The images are only for examples.
Recyclable material is allowed a size tolerance of ± 1,5%.

0,064 m³/m² Quantity (of concrete to the crown)**
** The volume may vary depending on the pouring condition and the tolerance of the material.

PRESSURES AT THE BOTTOM OF THE STRUCTURE — IGLU'® h 45 cm

Loads [1] kN/m²	Slab cm	Mesh Ø mm maglia cm x cm	Thickness of the lean concrete cm	Pressure at pillar base [2] MPa
15	4	Ø5 / 25 x 25	5 10 15	0,166 0,078 0,046
50	5	Ø6 / 15 x 15	10 15 20	0,223 0,128 0,083
100	8	Ø8 / 20 x 20	15 20 25	0,245 0,158 0,111

[1] *Characteristic values*
[2] *Project values (Ultimate SLU Limit State - Coefficients A1)*

The table expresses, starting from the various examples of overload and of thickness (to be given to the slab), the pressures that would be applied to the feet of the structure, in relation to the (eventual) thicknesses of the lean concrete. The overload hypotheses are indicated in table as an example; the actual load capacity is far superior.
To know the exact values or sizing as shown in the project, contact the technical department.
The Technical Office is available to provide planning support both in the preliminary and in the executive phase to determine the technical characteristics of the structures, the related construction costs and perform comparative analyzes with alternative technical solutions. Upon request, it is also possible to take advantage of technical assistance on site.

TECHNICAL DATA

IGLU'® H 45 cm

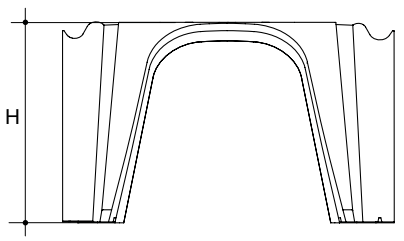

Useful size*	cm	50 x 50
Height H*	cm	45
Quantity of concrete to the crown**	m³/m²	0,064
Average piece weight	kg	1,622
Pallet dimensions	cm	110 x 110 x 247 h
M² pallet	m²/PAL	75
Pieces per pallet***	pcs/PAL	300
Pallet weight***	kg/PAL	500

* Recyclable material is allowed a size tolerance of ± 1,5%.
** The volume may vary depending on the pouring condition and the tolerance of the material.
*** For production necessity the technical data can be change.

DRY ASSEMBLY METHOD

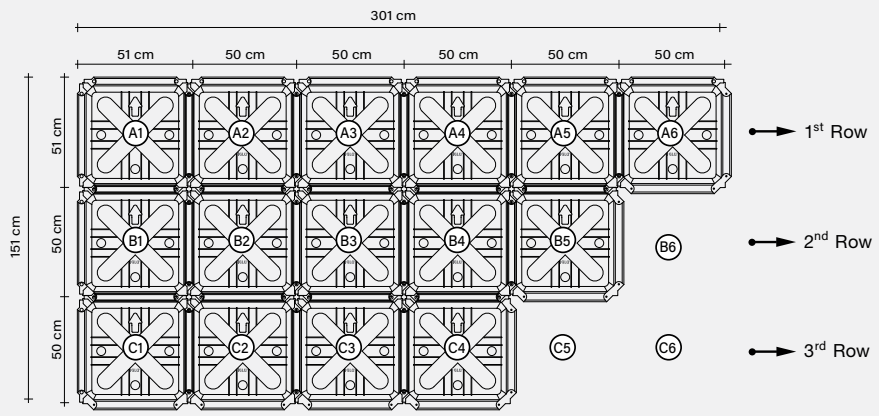

⚠ To ensure a correct installation and perfectly created under-floor cavity please refer to the product's usage requirements.

Dry-stone time-exposure of IGLU'®: 80 m²/h

TECHNICAL PACKING AND TRUCKING

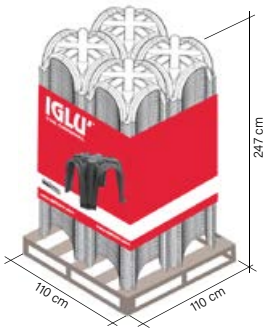

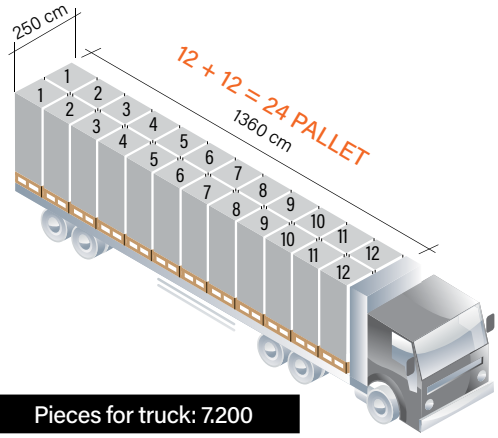

1 pallet: 4 piles of 75 pieces

Pieces for pallet: 300

Pieces for truck: 7.200

LABELLING

Each pallet is identified with:

A coloured band containing:
the brand, a type image of the product, the Company name, the website and any warnings.

A lebel with the following informations: product's name and code, quantity, Certificate of the Environmental Compatibility, date of production, shift of production, n° of the worker, production line batch.

CREDITS

- BBA;
- Declaration of Performance Conformity;
- Hygienic certificate;
- Acoustic check for verification of DIN standards;
- Avis Technique;
- Rupture load tests;
- Productive process monitoring tests;
- Certificate of Environmental Compatibility.

The product does not fear the weather and can be stored outside. Take the utmost care to prevent the product from being deformed or overstressed during the unloading, storage and assembly. In case of disposal the product is totally recyclable.

ACCESSORIES

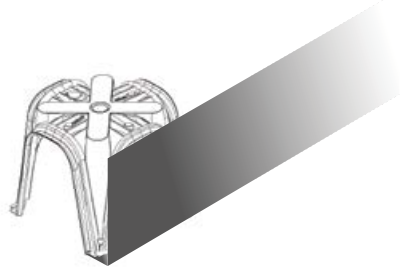

CASTING STOP L-PLAST

Useful size	cm	205 x 33,5+5+5+6,5
Thickness	cm	0,40
Piece weight	kg/pc	0,820
Package	m	50

CASTING STOP PIBIStop

Max Height	cm	30+5+5+5+5
Max Width	cm	45
Thickness	cm	0,40
Package	pcs	25

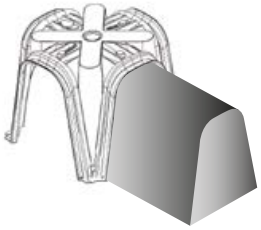

EXTENSION

Width	cm	37,3
Depth	cm	min. 10 max. 50
Height	cm	41,0

EXTENSION

Width	cm	40
Depth	cm	35
Height	cm	43

The information contained in this catalogue could be changed. Please request updated informations from DALIFORM GROUP, which reserves the right to make changes at any moment without notice.
In consideration of recycled material, it is specified that there are tolerance margins caused by environmental factors.

daliform GROUP
Building Innovation © Creatori dell'Iglù®

AVIS TECHNIQUE VALIDE CSTB le futur en construction N° 3.1-17-935_V1

IGLU® H 50 cm

Ventilated under-floor cavities for civil and industrial buildings that are being built new or reconstructed. - Urban infrastructure structures: squares, sidewalks, sports facility.
- Creation of an intermediate slab or roofing for cavities used for ventilation and the passage of systems. - Rooms used for humidity and temperature control: drying cells, cold rooms, greenhouses, storage rooms and cellars. - Underground pipes for the passage of utilities. Inspectionable cavities and pits. - By filling it in simply with expanded clay, it can be used to create roof-top gardens. - Underground ducts for the dispersion of water and for drainage. - Overhead sidewalks for passenger loading and unloading or the creation of floating floors. - Levelling height.

Made of ALAPLEN® CP30

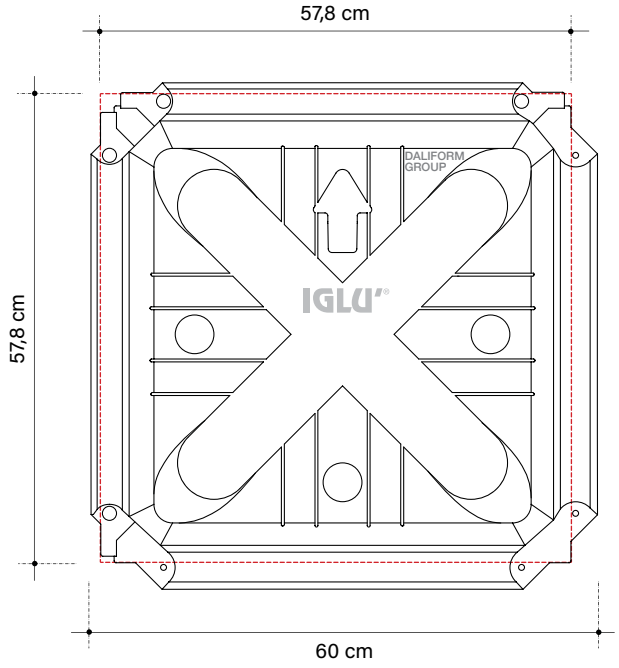

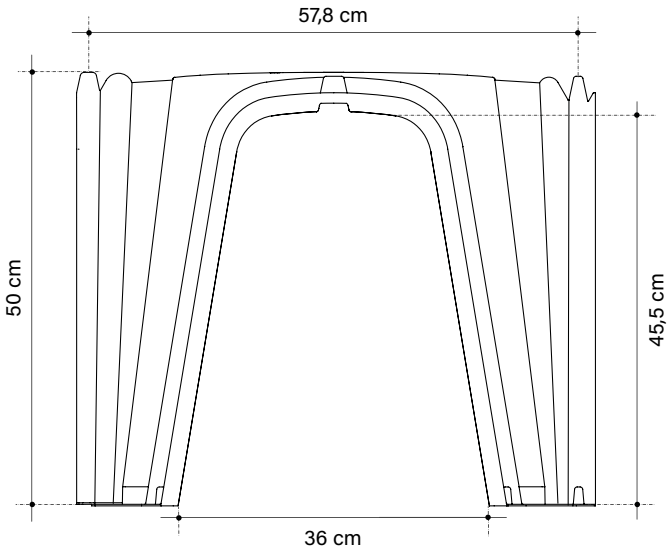

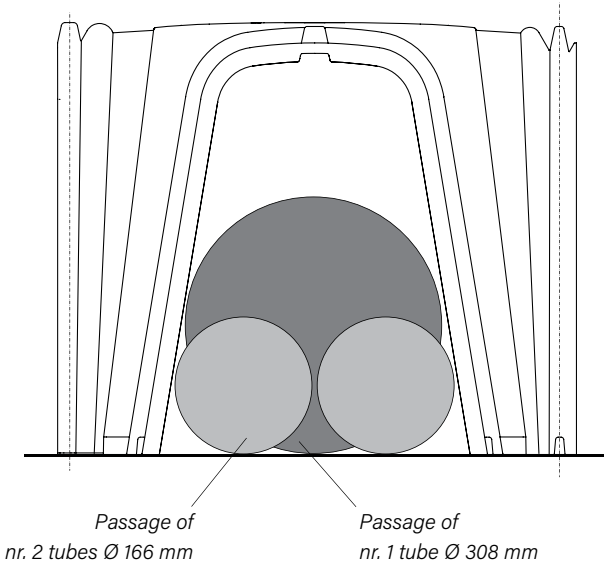

The images are only for examples.
Recyclable material is allowed a size tolerance of ± 1,5%.

0,077 m³/m²
Quantity (of concrete to the crown)**
** The volume may vary depending on the pouring condition and the tolerance of the material.

PRESSURES AT THE BOTTOM OF THE STRUCTURE — IGLU'® h 50 cm

Loads [1] kN/m²	Slab cm	Mesh Ø mm maglia cm x cm	Thickness of the lean concrete cm	Pressure at pillar base [2] MPa
15	4	Ø5 / 20 x 20	5 10 15	0,193 0,095 0,057
50	5	Ø8 / 20 x 20	10 15 20	0,269 0,158 0,105
100	10	doppia Ø6 / 20 x 20	20 25 30	0,200 0,142 0,106

[1] *Characteristic values*
[2] *Project values (Ultimate SLU Limit State - Coefficients A1)*

The table expresses, starting from the various examples of overload and of thickness (to be given to the slab), the pressures that would be applied to the feet of the structure, in relation to the (eventual) thicknesses of the lean concrete. The overload hypotheses are indicated in table as an example; the actual load capacity is far superior.
To know the exact values or sizing as shown in the project, contact the technical department.
The Technical Office is available to provide planning support both in the preliminary and in the executive phase to determine the technical characteristics of the structures, the related construction costs and perform comparative analyzes with alternative technical solutions. Upon request, it is also possible to take advantage of technical assistance on site.

TECHNICAL DATA

IGLU'® H 50 cm

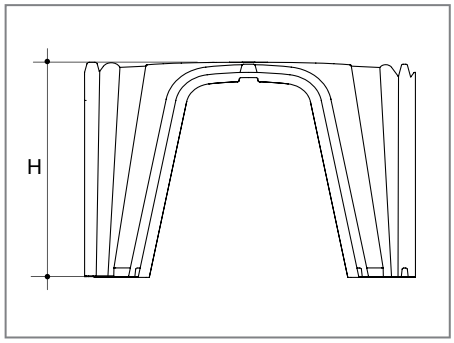

Useful size*	cm	57,8 x 57,8
Height H*	cm	50
Quantity of concrete to the crown**	m³/m²	0,077
Average piece weight	kg	2,552
Pallet dimensions	cm	120 x 120 x 261 h
M² pallet	m²/PAL	80
Pieces per pallet***	pcs/PAL	240
Pallet weight***	kg/PAL	627

* Recyclable material is allowed a size tolerance of ± 1,5%.
** The volume may vary depending on the pouring condition and the tolerance of the material.
*** For production necessity the technical data can be change.

DRY ASSEMBLY METHOD

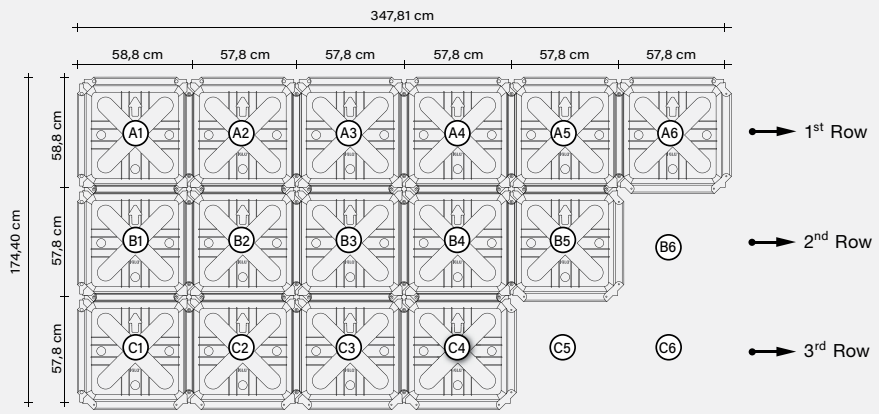

⚠ To ensure a correct installation and perfectly created under-floor cavity please refer to the product's usage requirements.

Dry-stone time-exposure of IGLU'®: 80 m²/h

TECHNICAL PACKING AND TRUCKING

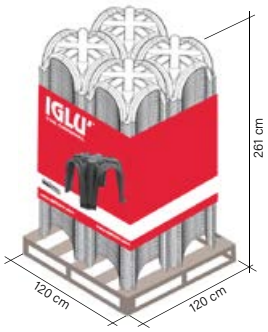

1 pallet: 4 piles of 60 pieces

Pieces for pallet: 240

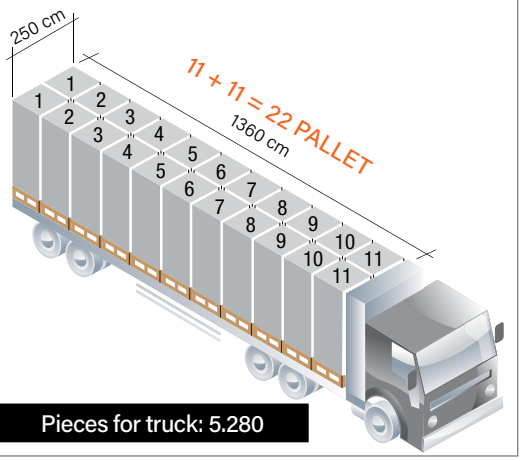

Pieces for truck: 5.280

LABELLING

Each pallet is identified with:

A coloured band containing:
the brand, a type image of the product, the Company name, the website and any warnings.

A lebel with the following informations: product's name and code, quantity, Certificate of the Environmental Compatibility, date of production, shift of production, n° of the worker, production line batch.

CREDITS

- BBA;
- Declaration of Performance Conformity;
- Hygienic certificate;
- Acoustic check for verification of DIN standards;
- Avis Technique;
- Rupture load tests;
- Productive process monitoring tests;
- Certificate of Environmental Compatibility.

The product does not fear the weather and can be stored outside. Take the utmost care to prevent the product from being deformed or overstressed during the unloading, storage and assembly. In case of disposal the product is totally recyclable.

ACCESSORIES

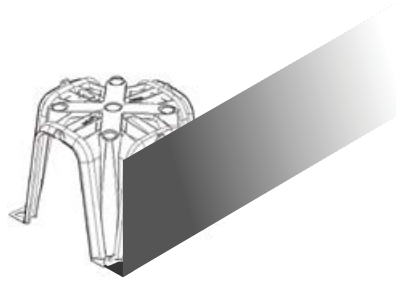

CASTING STOP L-PLAST

Useful size	cm	205 x 49+7
Thickness	cm	0,40
Piece weight	kg/pc	1,380
Package	m	20

CASTING STOP PIBIStop

Max Height	cm	50+5+5+7
Max Width	cm	49
Thickness	cm	0,40
Package	pcs	25

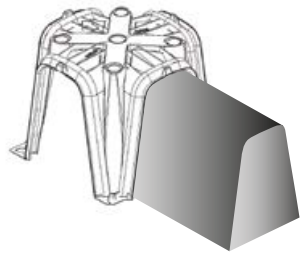

EXTENSION

Width	cm	36,1
Depth	cm	min. 10 max. 60
Height	cm	45,7

EXTENSION

Width	cm	41
Depth	cm	37
Height	cm	47

The information contained in this catalogue could be changed. Please request updated informations from DALIFORM GROUP, which reserves the right to make changes at any moment without notice.
In consideration of recycled material, it is specified that there are tolerance margins caused by environmental factors.

daliform GROUP
Building Innovation © Creatori dell'Iglù®

AVIS TECHNIQUE VALIDE CSTB le futur en construction N° 3.1-17-935_V1

IGLU® H 55 cm

Ventilated under-floor cavities for civil and industrial buildings that are being built new or reconstructed. - Urban infrastructure structures: squares, sidewalks, sports facility.
- Creation of an intermediate slab or roofing for cavities used for ventilation and the passage of systems. - Rooms used for humidity and temperature control: drying cells, cold rooms, greenhouses, storage rooms and cellars. - Underground pipes for the passage of utilities. Inspectionable cavities and pits. - By filling it in simply with expanded clay, it can be used to create roof-top gardens. - Underground ducts for the dispersion of water and for drainage. - Overhead sidewalks for passenger loading and unloading or the creation of floating floors. - Levelling height.

Made of ALAPLEN® CP30

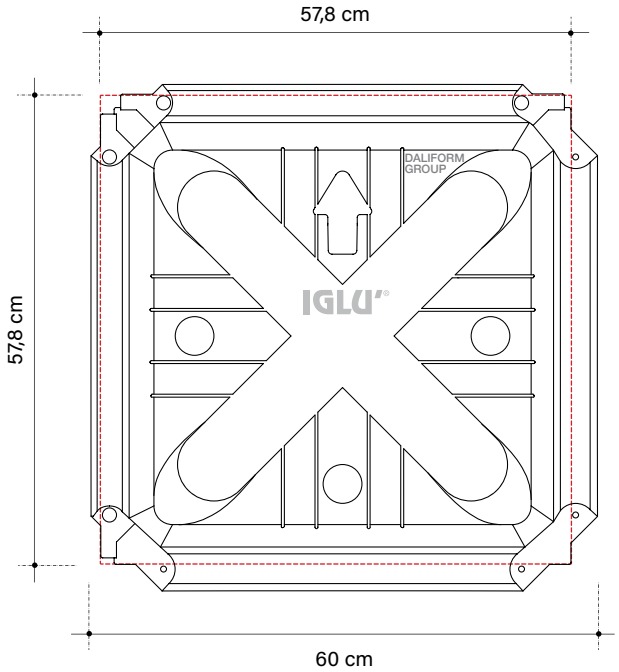

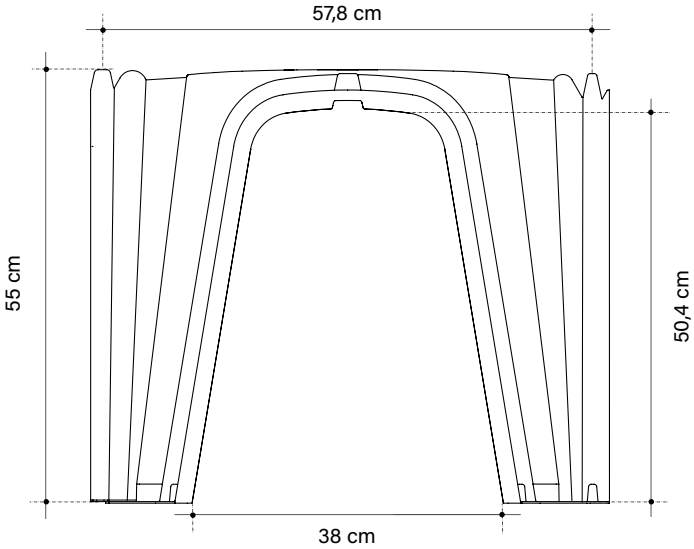

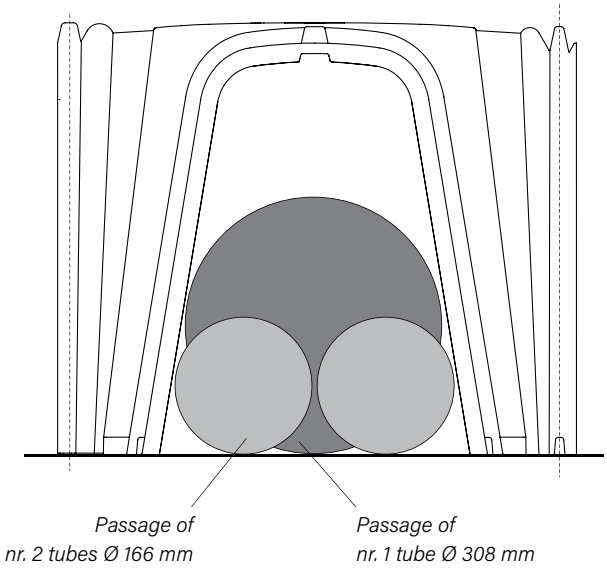

The images are only for examples.
Recyclable material is allowed a size tolerance of ± 1,5%.

0,080 m³/m²
Quantity (of concrete to the crown)**
** The volume may vary depending on the pouring condition and the tolerance of the material.

PRESSURES AT THE BOTTOM OF THE STRUCTURE — IGLU'® h 55 cm

Loads [1] kN/m²	Slab cm	Mesh Ø mm maglia cm x cm	Thickness of the lean concrete cm	Pressure at pillar base [2] MPa
15	4	Ø5 / 20 x 20	5 10 15	0,186 0,093 0,056
50	5	Ø8 / 20 x 20	10 15 20	0,262 0,155 0,103
100	10	doppia Ø6 / 20 x 20	20 25 30	0,197 0,140 0,105

[1] *Characteristic values*
[2] *Project values (Ultimate SLU Limit State - Coefficients A1)*

The table expresses, starting from the various examples of overload and of thickness (to be given to the slab), the pressures that would be applied to the feet of the structure, in relation to the (eventual) thicknesses of the lean concrete. The overload hypotheses are indicated in table as an example; the actual load capacity is far superior.
To know the exact values or sizing as shown in the project, contact the technical department.
The Technical Office is available to provide planning support both in the preliminary and in the executive phase to determine the technical characteristics of the structures, the related construction costs and perform comparative analyzes with alternative technical solutions. Upon request, it is also possible to take advantage of technical assistance on site.

TECHNICAL DATA

IGLU'® H 55 cm

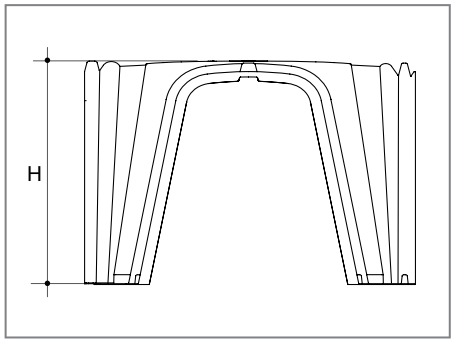

Useful size*	cm	57,8 x 57,8
Height H*	cm	55
Quantity of concrete to the crown**	m³/m²	0,080
Average piece weight	kg	2,693
Pallet dimensions	cm	120 x 120 x 248 h
M² pallet	m²/PAL	76
Pieces per pallet***	pcs/PAL	228
Pallet weight***	kg/PAL	628

* Recyclable material is allowed a size tolerance of ± 1,5%.
** The volume may vary depending on the pouring condition and the tolerance of the material.
*** For production necessity the technical data can be change.

DRY ASSEMBLY METHOD

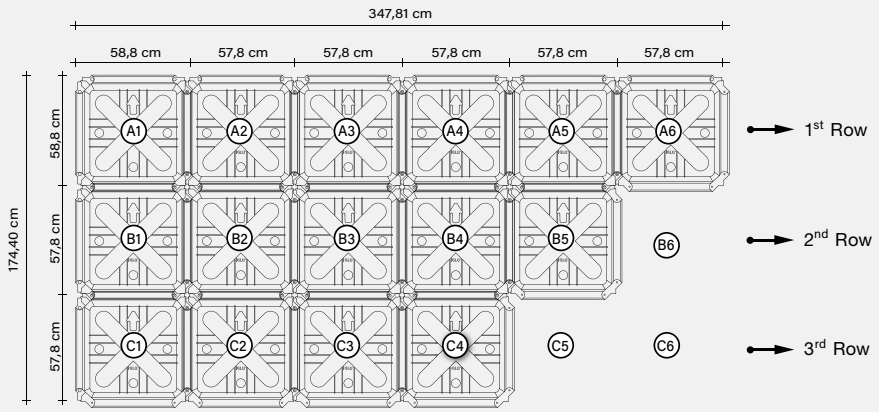

⚠ To ensure a correct installation and perfectly created under-floor cavity please refer to the product's usage requirements.

Dry-stone time-exposure of IGLU'®: 80 m²/h

TECHNICAL PACKING AND TRUCKING

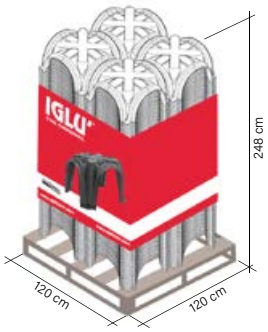

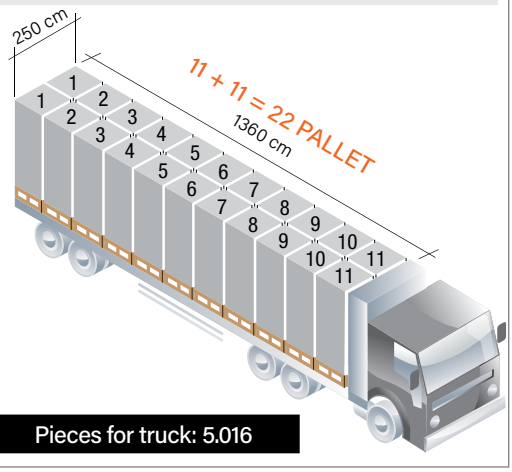

1 pallet: 4 piles of 57 pieces

Pieces for pallet: 228

Pieces for truck: 5.016

LABELLING

Each pallet is identified with:

A coloured band containing:
the brand, a type image of the product, the Company name, the website and any warnings.

A lebel with the following informations: product's name and code, quantity, Certificate of the Environmental Compatibility, date of production, shift of production, n° of the worker, production line batch.

CREDITS

- BBA;
- Declaration of Performance Conformity;
- Hygienic certificate;
- Acoustic check for verification of DIN standards;
- Avis Technique;
- Rupture load tests;
- Productive process monitoring tests;
- Certificate of Environmental Compatibility.

The product does not fear the weather and can be stored outside. Take the utmost care to prevent the product from being deformed or overstressed during the unloading, storage and assembly. In case of disposal the product is totally recyclable.

ACCESSORIES

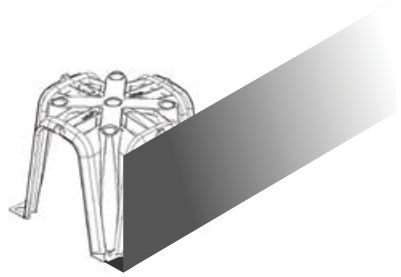

CASTING STOP L-PLAST

Useful size	cm	205 x 54+5+7
Thickness	cm	0,50
Piece weight	kg/pc	1,360
Package	m	20

CASTING STOP PIBIStop

Max Height	cm	50+5+5+7
Max Width	cm	49
Thickness	cm	0,40
Package	pcs	25

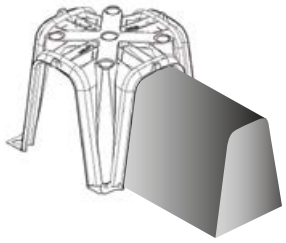

EXTENSION

Width	cm	38,2
Depth	cm	min. 10 max. 60
Height	cm	52,3

EXTENSION

Width	cm	42
Depth	cm	41
Height	cm	52

daliform GROUP
Building Innovation © Creatori dell'Iglù®

Tel. +39 0422 2083 - Fax +39 0422 800234
export@daliform.com - www.daliform.com
Via Postumia Centro, 49 - 31040
Gorgo al Monticano (TV) - Italy

Certified Management System
UNI EN ISO 9001 - UNI EN ISO 14001 - UNI EN ISO 45001 - SA8000

Member of GBC Italy

The information contained in this catalogue could be changed. Please request updated informations from DALIFORM GROUP, which reserves the right to make changes at any moment without notice.
In consideration of recycled material, it is specified that there are tolerance margins caused by environmental factors.

daliform GROUP
Building Innovation © Creatori dell'Iglù®

AVIS TECHNIQUE VALIDE CSTB le futur en construction N° 3.1-17-935_V1

IGLU® H 60 cm

Ventilated under-floor cavities for civil and industrial buildings that are being built new or reconstructed. - Urban infrastructure structures: squares, sidewalks, sports facility.
- Creation of an intermediate slab or roofing for cavities used for ventilation and the passage of systems. - Rooms used for humidity and temperature control: drying cells, cold rooms, greenhouses, storage rooms and cellars. - Underground pipes for the passage of utilities. Inspectionable cavities and pits. - By filling it in simply with expanded clay, it can be used to create roof-top gardens. - Underground ducts for the dispersion of water and for drainage. - Overhead sidewalks for passenger loading and unloading or the creation of floating floors. - Levelling height.

Made of ALAPLEN® CP30

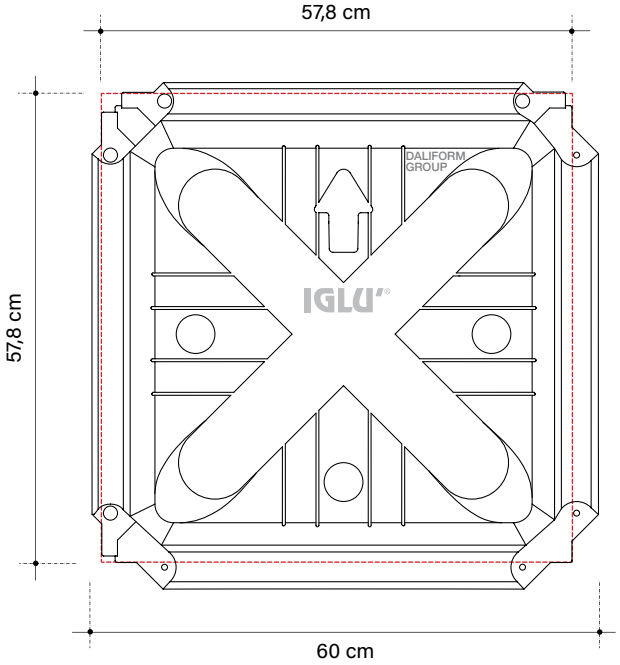

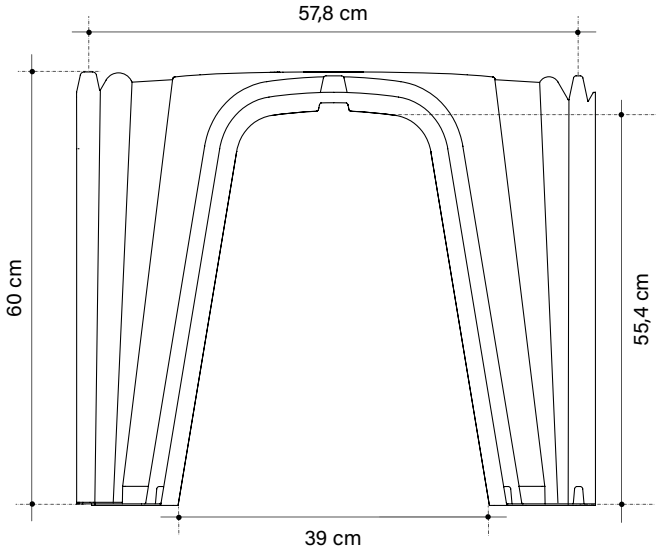

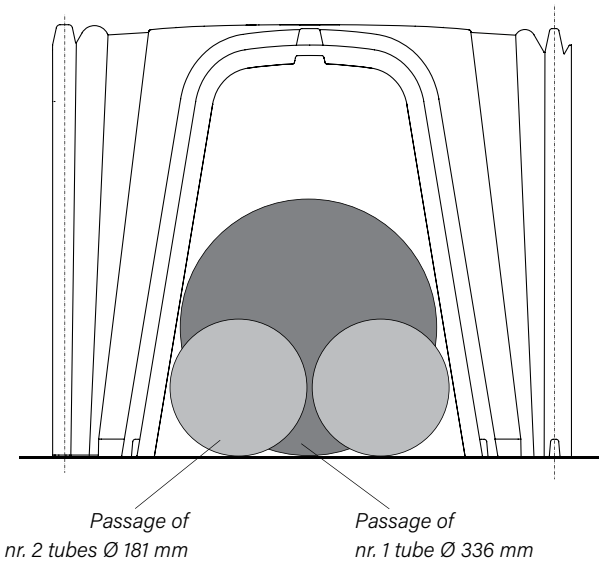

The images are only for examples.
Recyclable material is allowed a size tolerance of ± 1,5%.

0,083 m³/m²
Quantity (of concrete to the crown)**
** The volume may vary depending on the pouring condition and the tolerance of the material.

PRESSURES AT THE BOTTOM OF THE STRUCTURE — IGLU'® h 60 cm

Loads [1] kN/m²	Slab cm	Mesh Ø mm maglia cm x cm	Thickness of the lean concrete cm	Pressure at pillar base [2] MPa
15	4	Ø5 / 20 x 20	5 10 15	0,223 0,105 0,062
50	5	Ø8 / 20 x 20	10 15 20	0,296 0,170 0,111
100	10	doppia Ø6 / 20 x 20	20 25 30	0,212 0,149 0,110

[1] *Characteristic values*
[2] *Project values (Ultimate SLU Limit State - Coefficients A1)*

The table expresses, starting from the various examples of overload and of thickness (to be given to the slab), the pressures that would be applied to the feet of the structure, in relation to the (eventual) thicknesses of the lean concrete. The overload hypotheses are indicated in table as an example; the actual load capacity is far superior.
To know the exact values or sizing as shown in the project, contact the technical department.
The Technical Office is available to provide planning support both in the preliminary and in the executive phase to determine the technical characteristics of the structures, the related construction costs and perform comparative analyzes with alternative technical solutions. Upon request, it is also possible to take advantage of technical assistance on site.

TECHNICAL DATA

IGLU'® H 60 cm

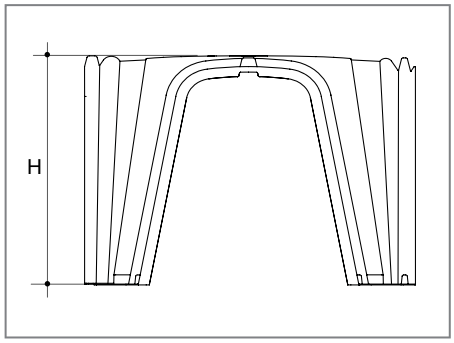

Useful size*	cm	57,8 x 57,8
Height H*	cm	60
Quantity of concrete to the crown**	m³/m²	0,083
Average piece weight	kg	2,801
Pallet dimensions	cm	120 x 120 x 257 h
M² pallet	m²/PAL	76
Pieces per pallet***	pcs/PAL	228
Pallet weight***	kg/PAL	653

* Recyclable material is allowed a size tolerance of ± 1,5%.
** The volume may vary depending on the pouring condition and the tolerance of the material.
*** For production necessity the technical data can be change.

DRY ASSEMBLY METHOD

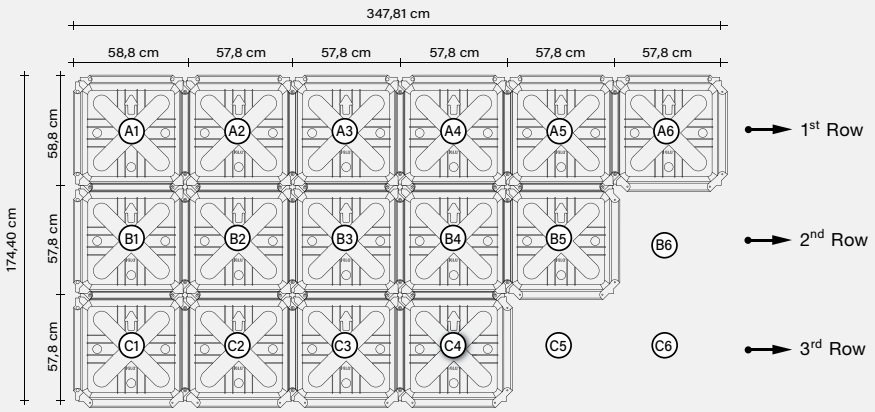

⚠ To ensure a correct installation and perfectly created under-floor cavity please refer to the product's usage requirements.

Dry-stone time-exposure of IGLU'®: 80 m²/h

TECHNICAL PACKING AND TRUCKING

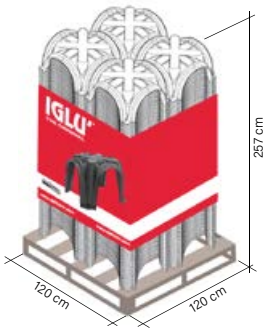

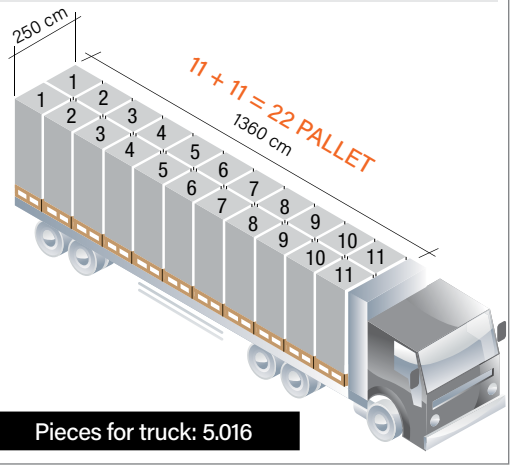

1 pallet: 4 piles of 57 pieces

Pieces for pallet: 228

Pieces for truck: 5.016

LABELLING

Each pallet is identified with:

A coloured band containing:
the brand, a type image of the product, the Company name, the website and any warnings.

A lebel with the following informations: product's name and code, quantity, Certificate of the Environmental Compatibility, date of production, shift of production, n° of the worker, production line batch.

CREDITS

- BBA;
- Declaration of Performance Conformity;
- Hygienic certificate;
- Acoustic check for verification of DIN standards;
- Avis Technique;
- Rupture load tests;
- Productive process monitoring tests;
- Certificate of Environmental Compatibility.

The product does not fear the weather and can be stored outside. Take the utmost care to prevent the product from being deformed or overstressed during the unloading, storage and assembly. In case of disposal the product is totally recyclable.

ACCESSORIES

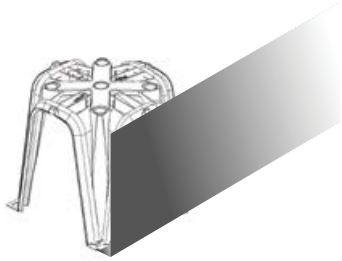

CASTING STOP L-PLAST

Useful size	cm	205 x 54+5+7
Thickness	cm	0,50
Piece weight	kg/pc	1,360
Package	m	20

CASTING STOP PIBIStop

Max Height	cm	50+5+5+7
Max Width	cm	49
Thickness	cm	0,40
Package	pcs	25

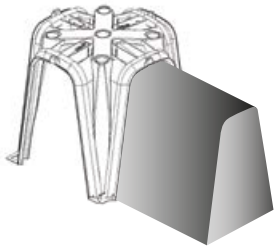

EXTENSION

Width	cm	39,4
Depth	cm	min. 10 max. 60
Height	cm	55,7

EXTENSION

Width	cm	44
Depth	cm	42
Height	cm	57

The information contained in this catalogue could be changed. Please request updated informations from DALIFORM GROUP, which reserves the right to make changes at any moment without notice.
In consideration of recycled material, it is specified that there are tolerance margins caused by environmental factors.